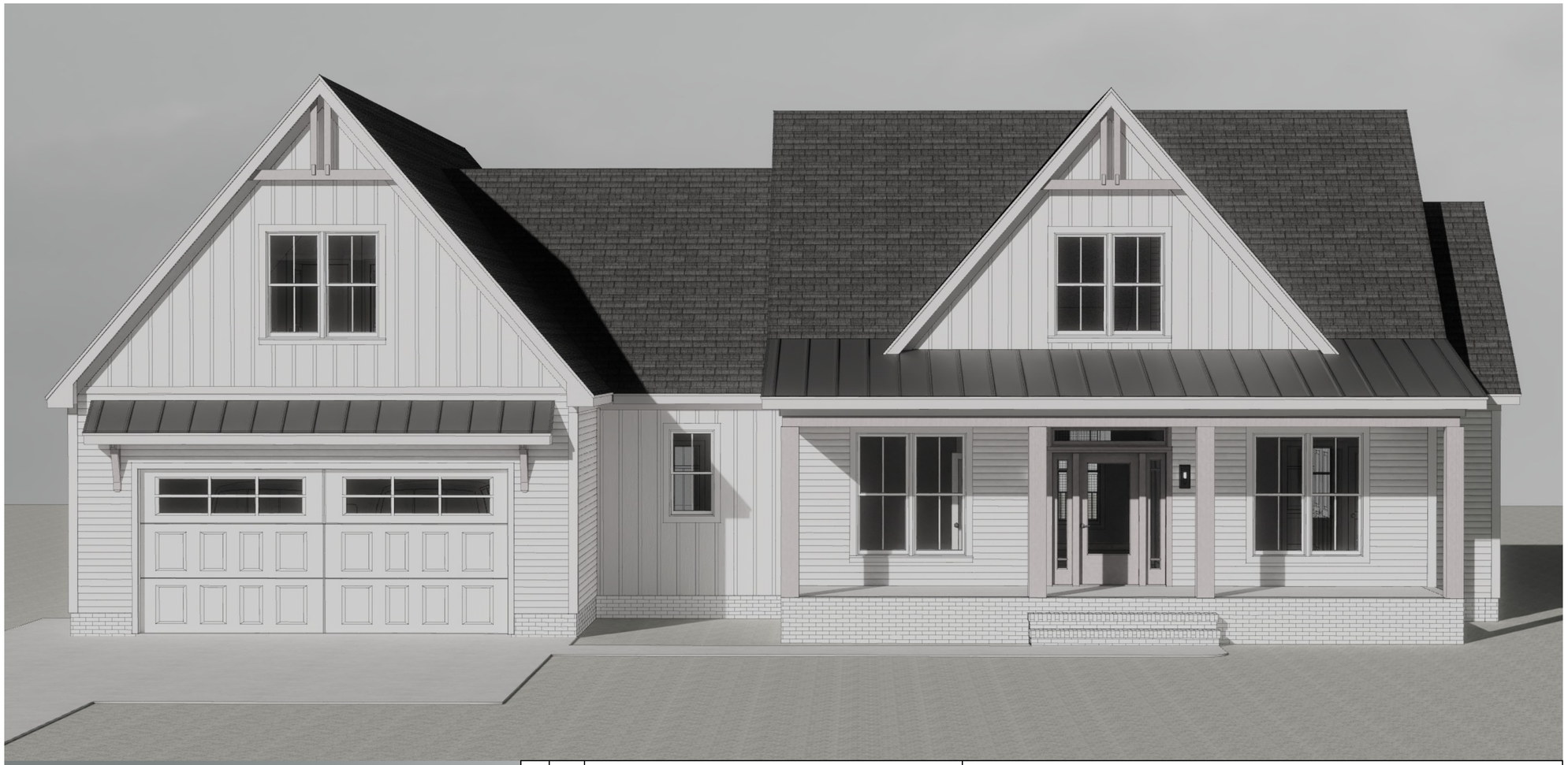

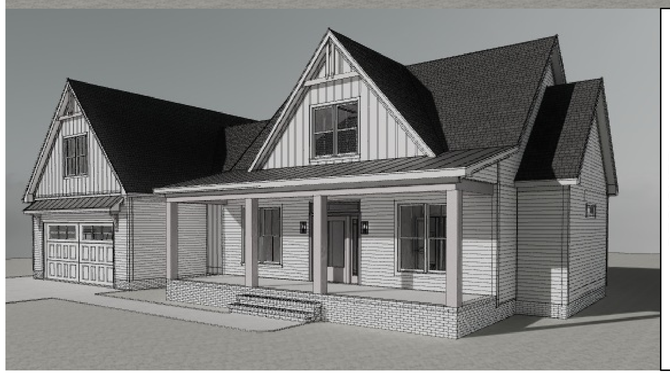

DESIGNER: TV

VENTING CALCULATIONS

CRAWL SPACE VENTILATION

THE MIN. NET FREE AREA OF CRAWL VENTILATION OPENINGS SHALL NOT BE LESS THAN 1 SQ. FT. FOR EACH 150 SQ. FT. OF CRAWL SPACE AREA.
2,063 SQ. FT. CRAWL SPACE AREA / 150
13.8 SQ. FT. NET FREE AREA REQUIRED
*MAY BE REDUCED BY 50% W. VAPOR BARRIER

ATTIC VENTILATION

3,251 SQ. FT. OF ATTIC / 300 = 10.8 SQ. FT. OF INLET AND OUTLET. VENTILATION MAY BE REDUCED 50% WHEN VENTILATORS ARE USED AT LEAST 3'-0" ABOVE THE CORNICE VENTS.

TRABAR HOMES

RANGEWOOD

LOT #21

© PLAN COPYRIGHT MCMILLAN DESIGN, INC.

"THE RENDERINGS PRESENTED ON THIS SHEET ARE TO REPRESENT THE INTENT OF THE DESIGN. ALL SITE CONDITIONS ARE APPROXIMATE AND SHALL BE CONFIRMED ON SITE, UNLESS NOTED OTHERWISE. ALL RENDERINGS SHOWN ARE NOT FOR THE PURPOSE OF CONSTRUCTION, AND SHALL NOT BE USED IN ANY SUCH WAY. ACTUAL RESULTS MAY VARY. "

McMillan Design
847 Wake Forest Business Park, Suite 102
Wake Forest, NC 27587
919.263.1509
www.mcmillan-design.com

Trabar Homes
Rangewood
Lot #21

Sheet Title:
Cover Sheet

REVISIONS

NUMBER	DATE

This plan is the property of McMillan Design and may not be used or reproduced without the expressed written consent of McMillan Design. These drawings are offered to the named client for a conditional one time use. The conditional use is limited to the lot or property as specified herein, and only for said location McMillan Design assumes no liability for any home constructed from these plans. Contractor or Builder shall verify all dimensions and conditions prior to construction. Caution must be exercised when making modifications to these drawings. If changes are made to these drawings, contact McMillan Design.

Plan Number
M052-25

Sheet No. CS-1

Drawn By: TE

Date: 5/16/2025

© COPYRIGHT 2023
McMillan Design, Inc.

FRONT ELEVATION

Scale: 1/4" = 1'-0"

ELEVATION NOTES

BUILDING CODES

THIS PLAN HAS BEEN DESIGNED UNDER THE NC BUILDING CODES, 2018 RESIDENTIAL EDITION.

ICE GUARDS:

ASPHALT SHINGLES SHALL BE USED ONLY ON ROOF SLOPES OF TWO UNITS VERTICAL IN 12 UNITS HORIZONTAL (2:12) OR GREATER. FOR ROOF SLOPES FROM TWO UNITS VERTICAL IN 12 UNITS HORIZONTAL (2:12) UP TO FOUR UNITS VERTICAL IN 12 UNITS HORIZONTAL (4:12), DOUBLE UNDERLAYMENT APPLICATION IS REQUIRED IN ACCORDANCE WITH SECTION R905.1.1.

MATERIAL LEGEND

- ASPHALT SHINGLES
- VERTICAL SIDING
- HORIZONTAL LAP SIDING
- BOARD & BATTEN SIDING @ 16" O.C.
- SHAKE SIDING
- BRICK VENEER
- SYNTHETIC STONE VENEER
- PARGED BLOCK FOUNDATION

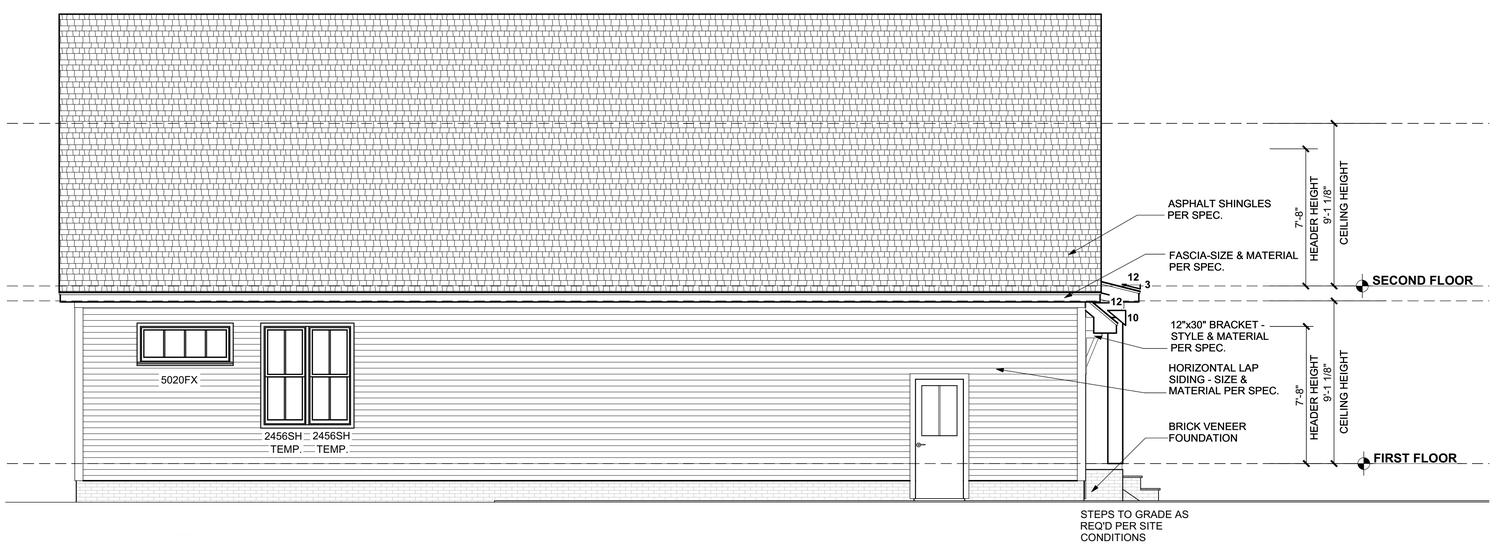

LEFT ELEVATION

Scale: 1/4" = 1'-0"

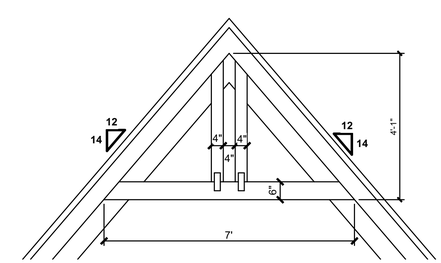

WD GABLE BRACKET

Scale: 1/2" = 1'-0"

McMillan Design
847 Wake Forest Business Park, Suite 102
Wake Forest, NC 27587
919.263.1509
www.mcmillan-design.com

Trabar Homes
Rangewood
Lot #21

Sheet Title: Exterior Elevations

REVISIONS	
NUMBER	DATE

This plan is the property of McMillan Design and may not be used or reproduced without the expressed written consent of McMillan Design. These drawings are offered to the named client for a conditional one time use. The conditional use is limited to the lot or property as specified herein, and only for said location McMillan Design assumes no liability for any home constructed from these plans. Contractor or Builder shall verify all dimensions and conditions prior to construction. Caution must be exercised when making modifications to these drawings. If changes are made to these drawings, contact McMillan Design.

Plan Number: M052-25

Sheet No. A-1

Drawn By: TE

Date: 5/16/2025

© COPYRIGHT 2023 McMillan Design, Inc.

REAR ELEVATION

Scale: 1/4" = 1'-0"

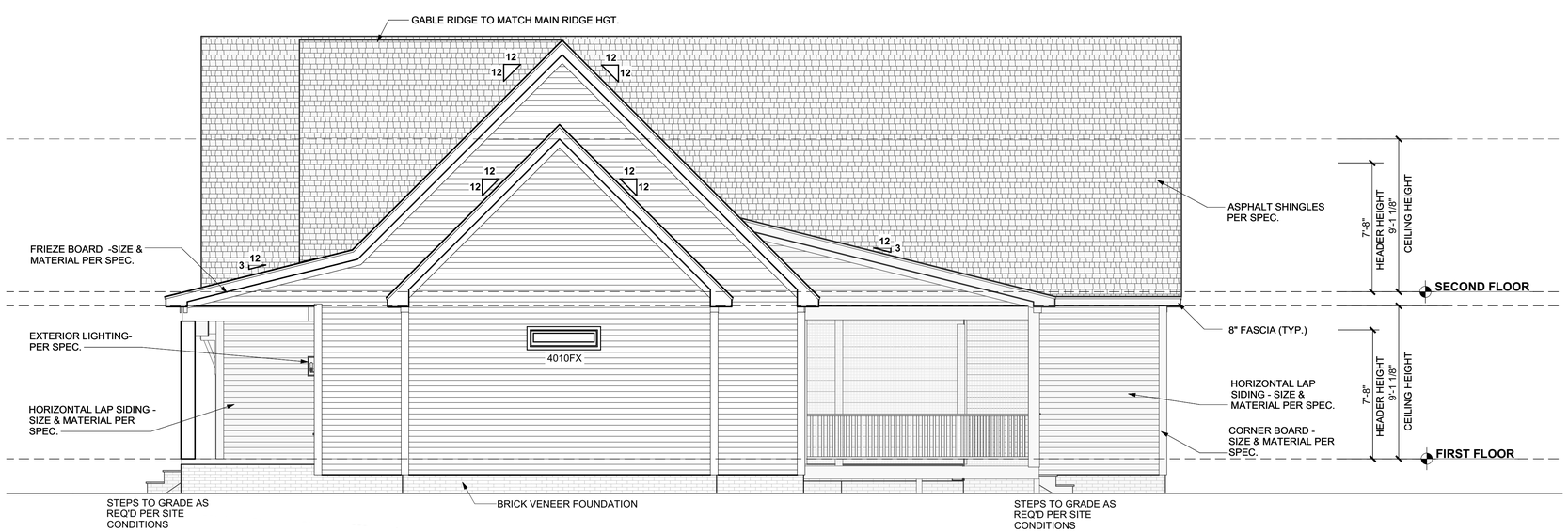

RIGHT ELEVATION

Scale: 1/4" = 1'-0"

ELEVATION NOTES

BUILDING CODES

THIS PLAN HAS BEEN DESIGNED UNDER THE NC BUILDING CODES, 2018 RESIDENTIAL EDITION.

ICE GUARDS:

ASPHALT SHINGLES SHALL BE USED ONLY ON ROOF SLOPES OF TWO UNITS VERTICAL IN 12 UNITS HORIZONTAL (2:12) OR GREATER. FOR ROOF SLOPES FROM TWO UNITS VERTICAL IN 12 UNITS HORIZONTAL (2:12) UP TO FOUR UNITS VERTICAL IN 12 UNITS HORIZONTAL (4:12), DOUBLE UNDERLAYMENT APPLICATION IS REQUIRED IN ACCORDANCE WITH SECTION R905.1.1.

MATERIAL LEGEND

- ASPHALT SHINGLES
- VERTICAL SIDING
- HORIZONTAL LAP SIDING
- BOARD & BATTEN SIDING @ 16" O.C.
- SHAKE SIDING
- BRICK VENEER
- SYNTHETIC STONE VENEER
- PARGED BLOCK FOUNDATION

McMillan Design
847 Wake Forest Business Park, Suite 102
Wake Forest, NC 27587
919.263.1509
www.mcmillan-design.com

Trabar Homes
Rangewood
Lot #21

Sheet Title: Exterior Elevations

REVISIONS	
NUMBER	DATE

This plan is the property of McMillan Design and may not be used or reproduced without the expressed written consent of McMillan Design. These drawings are offered to the named client for a conditional one time use. The conditional use is limited to the lot or property as specified herein, and only for said location McMillan Design assumes no liability for any home constructed from these plans. Contractor or Builder shall verify all dimensions and conditions prior to construction. Caution must be exercised when making modifications to these drawings. If changes are made to these drawings, contact McMillan Design.

Plan Number
M052-25

Sheet No. A-2

Drawn By: TE

Date: 5/16/2025

© COPYRIGHT 2023
McMillan Design, Inc.

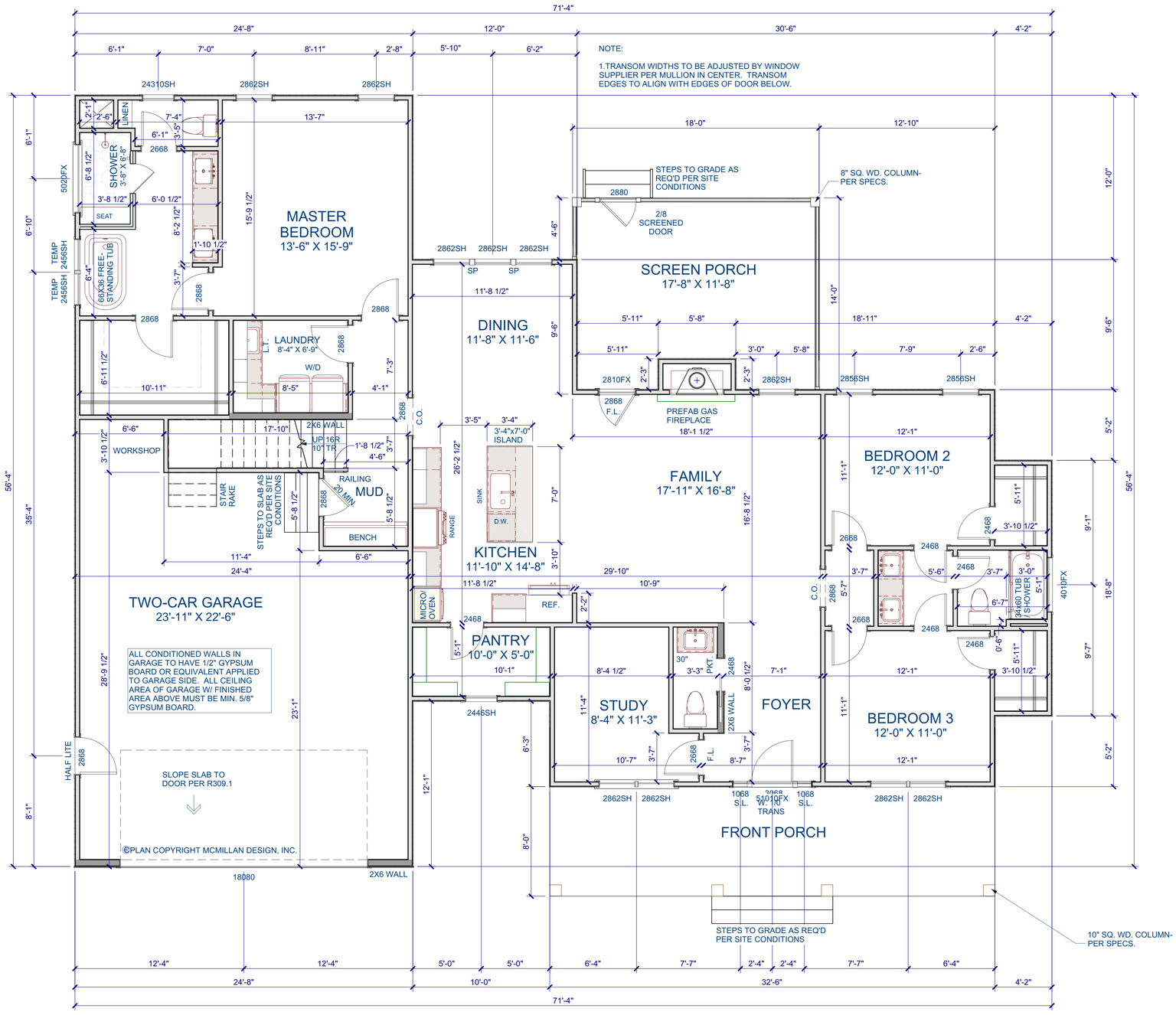

FIRST FLOOR PLAN

Scale: 1/4" = 1'-0"

GENERAL NOTES

WALLS
ALL WALLS ARE DRAWN 3.5" WIDE (2X4) OR 5.5" WIDE (2X6) U.N.O.
ANGLED WALL ARE DRAWN @45° U.N.O.
EXTERIOR DIMENSIONS ARE TO FACE OF SHEATHING. INTERIOR DIMENSIONS ARE TO FACE OF STUD.

SMOKE DETECTORS
LOCATION AND NUMBER OF DETECTORS SHALL CONFORM TO NEC.

EGRESS
ALL BEDROOMS MUST HAVE AT LEAST ONE WINDOW WHICH CONFORMS TO R-310 OF THE N.C. BLDG. CODE. IT IS THE CONTRACTOR'S RESPONSIBILITY TO VERIFY CHOSEN WINDOWS MEET EGRESS REQUIREMENTS AS MANUFATURERS VARY.

ATTIC ACCESS
MIN. ATTIC ACCESS SHALL BE PROVIDED BY BUILDER AND LOCATED ON SITE.

WALL/CEILING HEIGHT
WALL AND CEILING HEIGHT NOTES ARE BASED ON NOMINAL WALL SIZE. KNEE WALL HEIGHT LABELS FOR WALLS UNDER RAFTERS ASSUME AN EXTRA 2" FOR FURRING (IN HEATED SPACES) FOR INSULATION. THE WALL HEIGHT REFERS TO THE HGT. FROM THE FLOOR DECKING TO THE BOTTOM OF THE FURRING.

WINDOW NOTE LEGEND

DH	DOUBLE HUNG
SH	SINGLE HUNG
FX	FIXED
SC	SINGLE CASEMENT
DC	DOUBLE CASEMENT
TC	TRIPLE CASEMENT

Square Footage	
First Floor	2063
Total Heated	**2063**
Unfinished	
Front Porch	261
Two-Car Garage	690
Screen Porch	237
Total Unfinished	**1188**
Unfin. Storage and Options	
Future Gameroom	436
Future 2nd Floor Full Bath	46
Total Storage / Options	**482**

McMillan Design
847 Wake Forest Business Park, Suite 102
Wake Forest, NC 27587
919.263.1509
www.mcmillan-design.com

Trabar Homes
Rangewood
Lot #21

Sheet Title:
First Floor Plan

REVISIONS

NUMBER	DATE

This plan is the property of McMillan Design and may not be used or reproduced without the expressed written consent of McMillan Design. These drawings are offered to the named client for a conditional one time use. The conditional use is limited to the lot or property as specified herein, and only for said location McMillan Design assumes no liability for any home constructed from these plans. Contractor or Builder shall verify all dimensions and conditions prior to construction. Caution must be exercised when making modifications to these drawings. If changes are made to these drawings, contact McMillan Design.

Plan Number
M052-25

Sheet No. A-3

Drawn By: TE

Date: 5/16/2025

© COPYRIGHT 2023
McMillan Design, Inc.

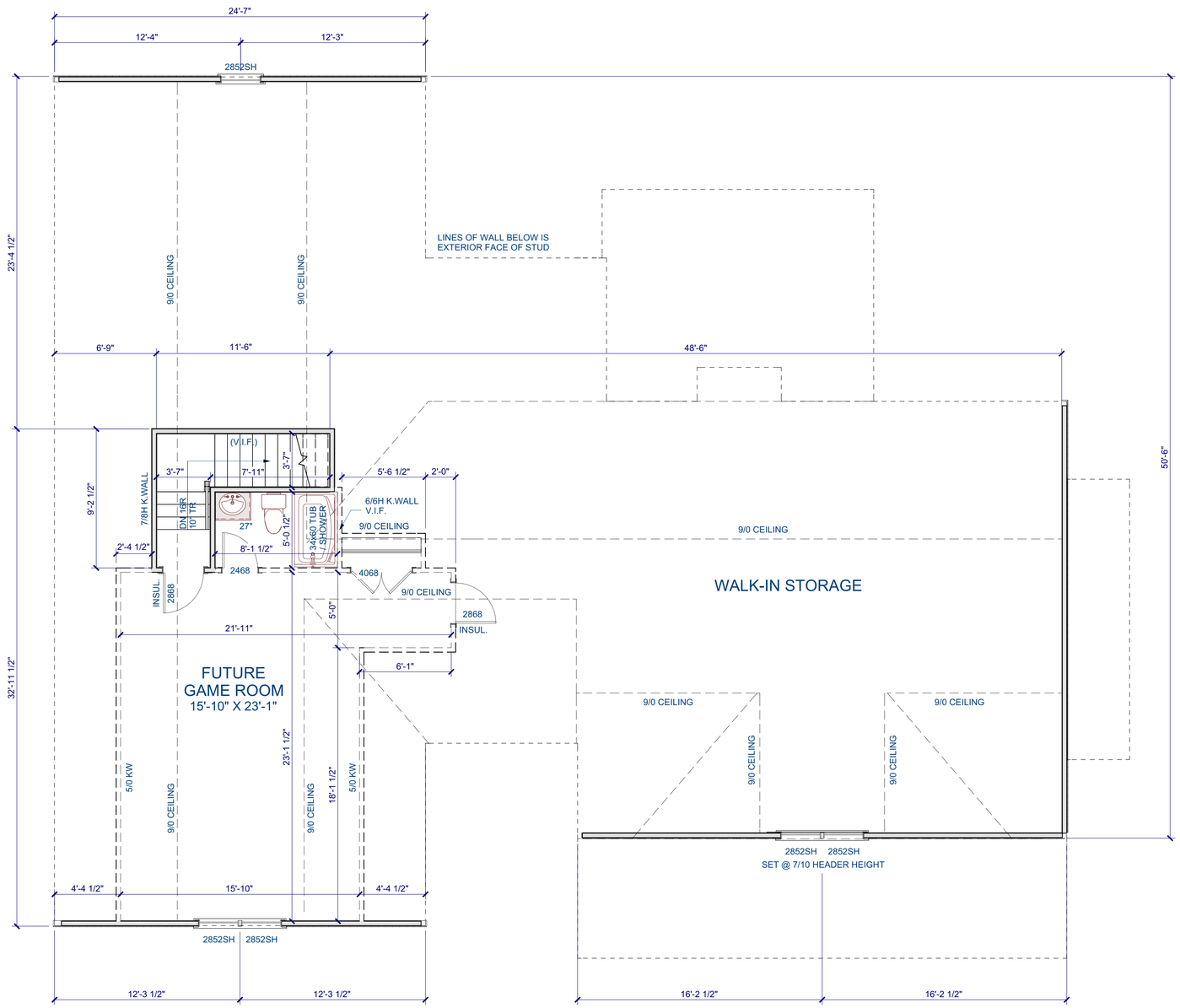

SECOND FLOOR PLAN

Scale: 1/4" = 1'-0"

GENERAL NOTES

WALLS
ALL WALLS ARE DRAWN 3.5" WIDE (2X4) OR 5.5" WIDE (2X6) U.N.O.
ANGLED WALL ARE DRAWN @45° U.N.O.
EXTERIOR DIMENSIONS ARE TO FACE OF SHEATHING. INTERIOR DIMENSIONS ARE TO FACE OF STUD.

SMOKE DETECTORS
LOCATION AND NUMBER OF DETECTORS SHALL CONFORM TO NEC.

EGRESS
ALL BEDROOMS MUST HAVE AT LEAST ONE WINDOW WHICH CONFORMS TO R-310 OF THE N.C. BLDG. CODE. IT IS THE CONTRACTOR'S RESPONSIBILITY TO VERIFY CHOSEN WINDOWS MEET EGRESS REQUIREMENTS AS MANUFATURERS VARY.

ATTIC ACCESS
MIN. ATTIC ACCESS SHALL BE PROVIDED BY BUILDER AND LOCATED ON SITE.

WALL/CEILING HEIGHT
WALL AND CEILING HEIGHT NOTES ARE BASED ON NOMINAL WALL SIZE. KNEE WALL HEIGHT LABELS FOR WALLS UNDER RAFTERS ASSUME AN EXTRA 2" FOR FURRING (IN HEATED SPACES) FOR INSULATION. THE WALL HEIGHT REFERS TO THE HGT. FROM THE FLOOR DECKING TO THE BOTTOM OF THE FURRING.

WINDOW NOTE LEGEND

DH	DOUBLE HUNG
SH	SINGLE HUNG
FX	FIXED
SC	SINGLE CASEMENT
DC	DOUBLE CASEMENT
TC	TRIPLE CASEMENT

McMillan Design
847 Wake Forest Business Park, Suite 102
Wake Forest, NC 27587
919.263.1509
www.mcmillan-design.com

Trabar Homes
Rangewood
Lot #21

Sheet Title:
Second Floor Plan

REVISIONS

NUMBER	DATE

This plan is the property of McMillan Design and may not be used or reproduced without the expressed written consent of McMillan Design. These drawings are offered to the named client for a conditional one time use. The conditional use is limited to the lot or property as specified herein, and only for said location McMillan Design assumes no liability for any home constructed from these plans. Contractor or Builder shall verify all dimensions and conditions prior to construction. Caution must be exercised when making modifications to these drawings. If changes are made to these drawings, contact McMillan Design.

Plan Number
M052-25

Sheet No. A-4

Drawn By: TE

Date: 5/16/2025

© COPYRIGHT 2023
McMillan Design, Inc.

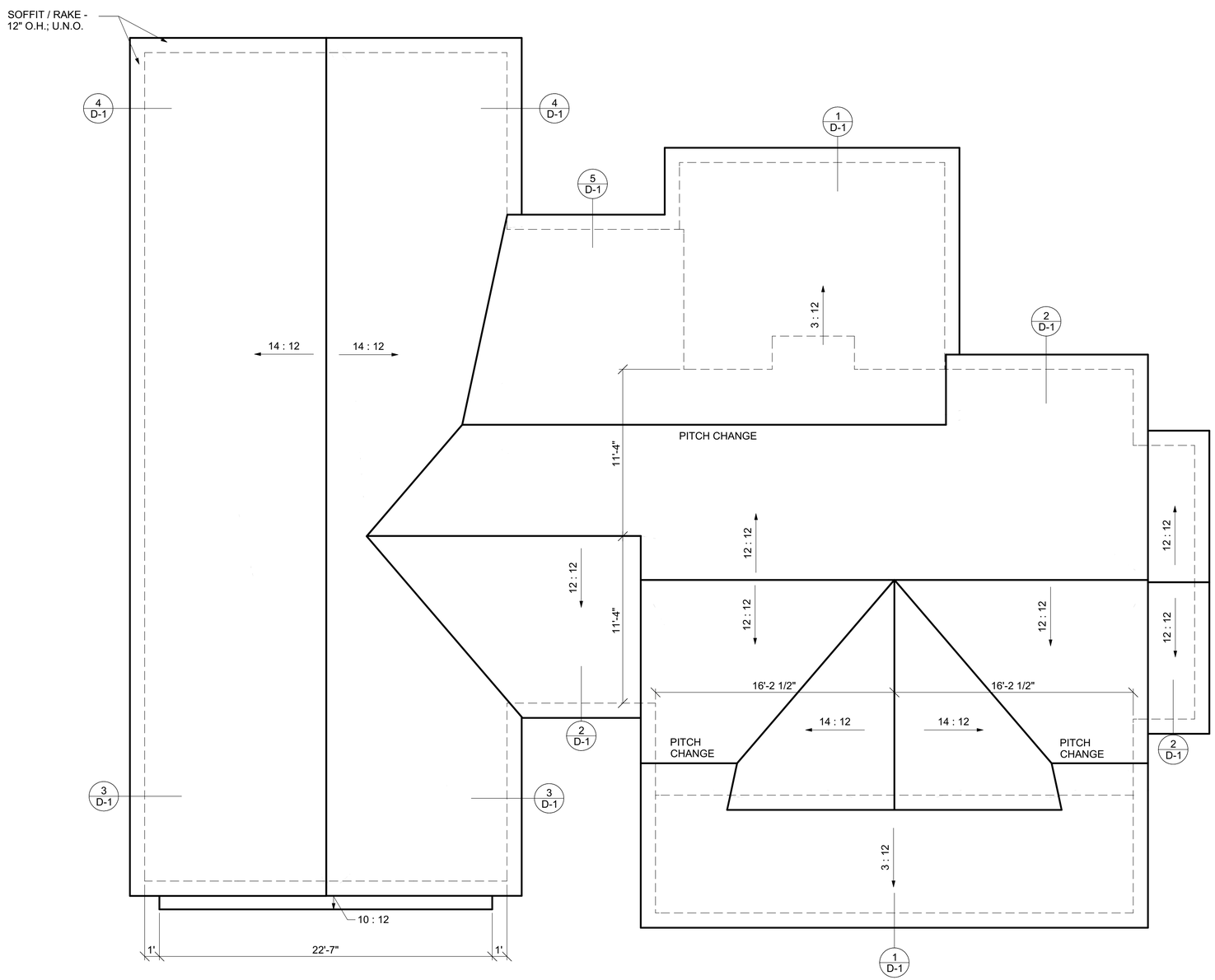

ROOF PLAN

Scale: 1/4" = 1'-0"

McMillan Design
847 Wake Forest Business Park, Suite 102
Wake Forest, NC 27587
919.263.1509
www.mcmillan-design.com

Trabar Homes
Rangewood
Lot #21

Sheet Title:
Roof Plan

REVISIONS

NUMBER	DATE

This plan is the property of McMillan Design and may not be used or reproduced without the expressed written consent of McMillan Design. These drawings are offered to the named client for a conditional one time use. The conditional use is limited to the lot or property as specified herein, and only for said location McMillan Design assumes no liability for any home constructed from these plans. Contractor or Builder shall verify all dimensions and conditions prior to construction. Caution must be exercised when making modifications to these drawings. If changes are made to these drawings, contact McMillan Design.

Plan Number
M052-25

Sheet No. A-5

Drawn By: TE

Date: 5/16/2025

© COPYRIGHT 2023
McMillan Design, Inc.

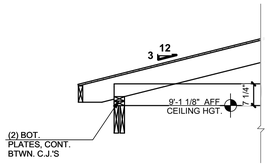

1 D-1 **FRAMING DETAIL**
Scale: 1/2" = 1'-0"

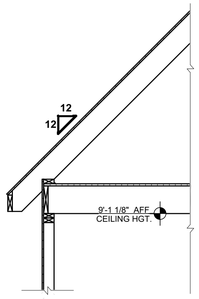

2 D-1 **FRAMING DETAIL**
Scale: 1/2" = 1'-0"

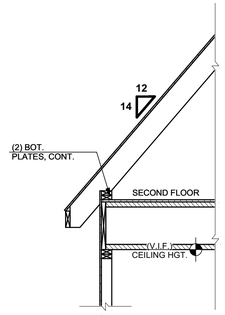

3 D-1 **FRAMING DETAIL**
Scale: 1/2" = 1'-0"

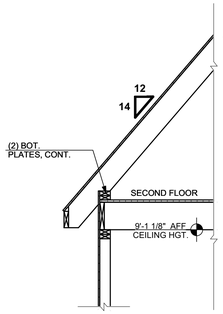

4 D-1 **FRAMING DETAIL**
Scale: 1/2" = 1'-0"

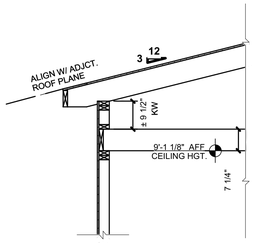

5 D-1 **FRAMING DETAIL**
Scale: 1/2" = 1'-0"

NOTES

1. REFER TO CORNICE DETAILS AND ELEVATIONS FOR CORNICE AND SOFFIT INFORMATION.

2. REFER TO ROOF PLAN FOR ALL ROOF OVERHANG AND PITCH SPECIFICATIONS.

3. SEE STRUCTURAL DRAWINGS FOR EXACT STRUCTURAL FRAMING DESIGN.

AFF =	ABOVE FINISH FLOOR
AFFF =	ABOVE FINISH FIRST FLOOR
AFSF =	ABOVE FINISH SECOND FLOOR
VIF =	VERIFY IN FIELD
BRG. =	BEARING
COORD. =	COORDINATE
CONT. =	CONTINUOUS

4. REFER TO STRUCTURAL PLANS FOR ALL RAFTER, BEAM, JOIST SIZES AND CONNECTION INFORMATION.

5. VERIFY ALL DIMENSIONS IN THE FIELD. CONTACT MCMILLAN DESIGN FOR CLARIFICATION OF ANY DISCREPANCIES.

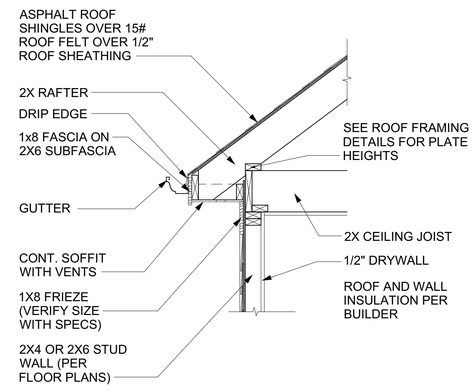

BOXED CORNICE DETAIL
Scale: 3/4" = 1'-0"

McMillan Design
847 Wake Forest Business Park, Suite 102
Wake Forest, NC 27587
919.263.1509
www.mcmillan-design.com

Trabar Homes
Rangewood
Lot #21

Sheet Title:
Roof Details

REVISIONS

NUMBER	DATE

This plan is the property of McMillan Design and may not be used or reproduced without the expressed written consent of McMillan Design. These drawings are offered to the named client for a conditional one time use. The conditional use is limited to the lot or property as specified herein, and only for said location McMillan Design assumes no liability for any home constructed from these plans. Contractor or Builder shall verify all dimensions and conditions prior to construction. Caution must be exercised when making modifications to these drawings. If changes are made to these drawings, contact McMillan Design.

Plan Number
M052-25

Sheet No. D-1

Drawn By: TE

Date: 5/16/2025

© COPYRIGHT 2023
McMillan Design, Inc.

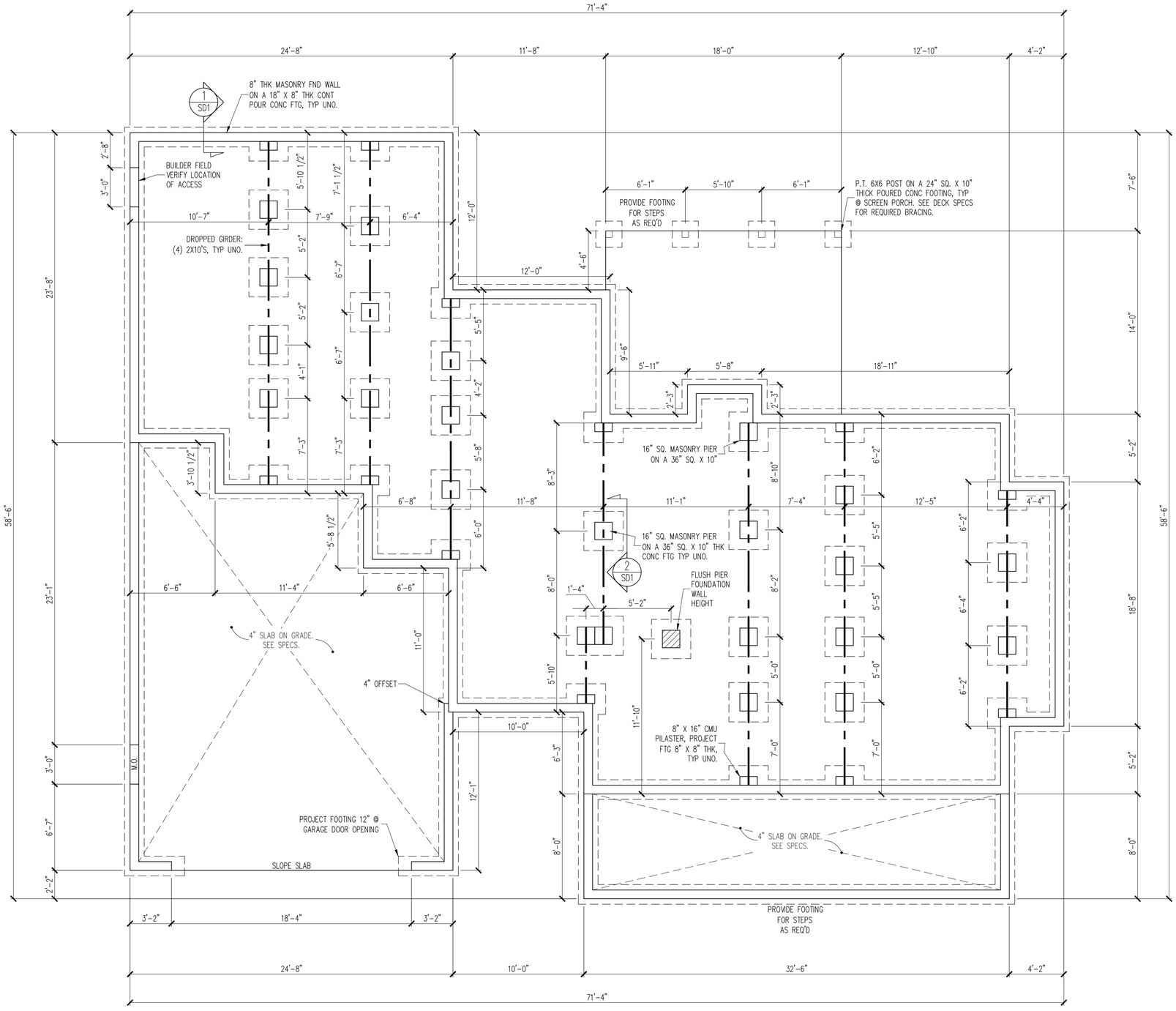

PLAN DESIGNED UNDER 2018 NORTH CAROLINA RESIDENTIAL CODE

NOTES:
- HEIGHT AND BACKFILL LIMITATIONS FOR FOUNDATION WALLS ARE TO BE GOVERNED BY THE NCSBC, LATEST EDITION. REINFORCEMENT AND GROUTING SHALL BE DETERMINED BY FINAL SITE CONDITIONS.
- BUILDER TO FIELD LOCATE CRAWLSPACE ACCESS OPENING WITH MINIMUM DIMENSIONS OF 18X24. DO NOT LOCATE ACCESS OPENING BELOW POINT LOADS FROM ABOVE WITHOUT ENGINEER APPROVAL.

FOUNDATION PLAN

1/4" = 1'-0"

The structural design of this plan is the property of Engineering Tech Associates, P.A. These plans are for the one time use at the location and for the client listed. Engineering Tech Associates, P.A. assumes no liability for these plans if they are reproduced, in whole or in part, for construction at any other location without written permission from Engineering Tech Associates, P.A.

NORTH CAROLINA PROFESSIONAL SEAL 035021 ENGINEER RALPH J. SIGLER III

Engineering Tech ASSOCIATES, P.A.
STRUCTURAL ENGINEERS
License No. C-3870
318 W Millbrook Rd. Unit 201
Raleigh, North Carolina 27609
Phone (919) 844-1661

TRABAR HOMES, LLC
STRUCTURAL ADDENDUM
SCOPE:
LOC: 21 RANGEWOOD

REV #	REF PROJ #	DATE

ENG: PAL/RJS
DATE: 05/19/2025

PARENT
M052-25

PROJECT NO.
25-21-099

SHEET NO.
S1

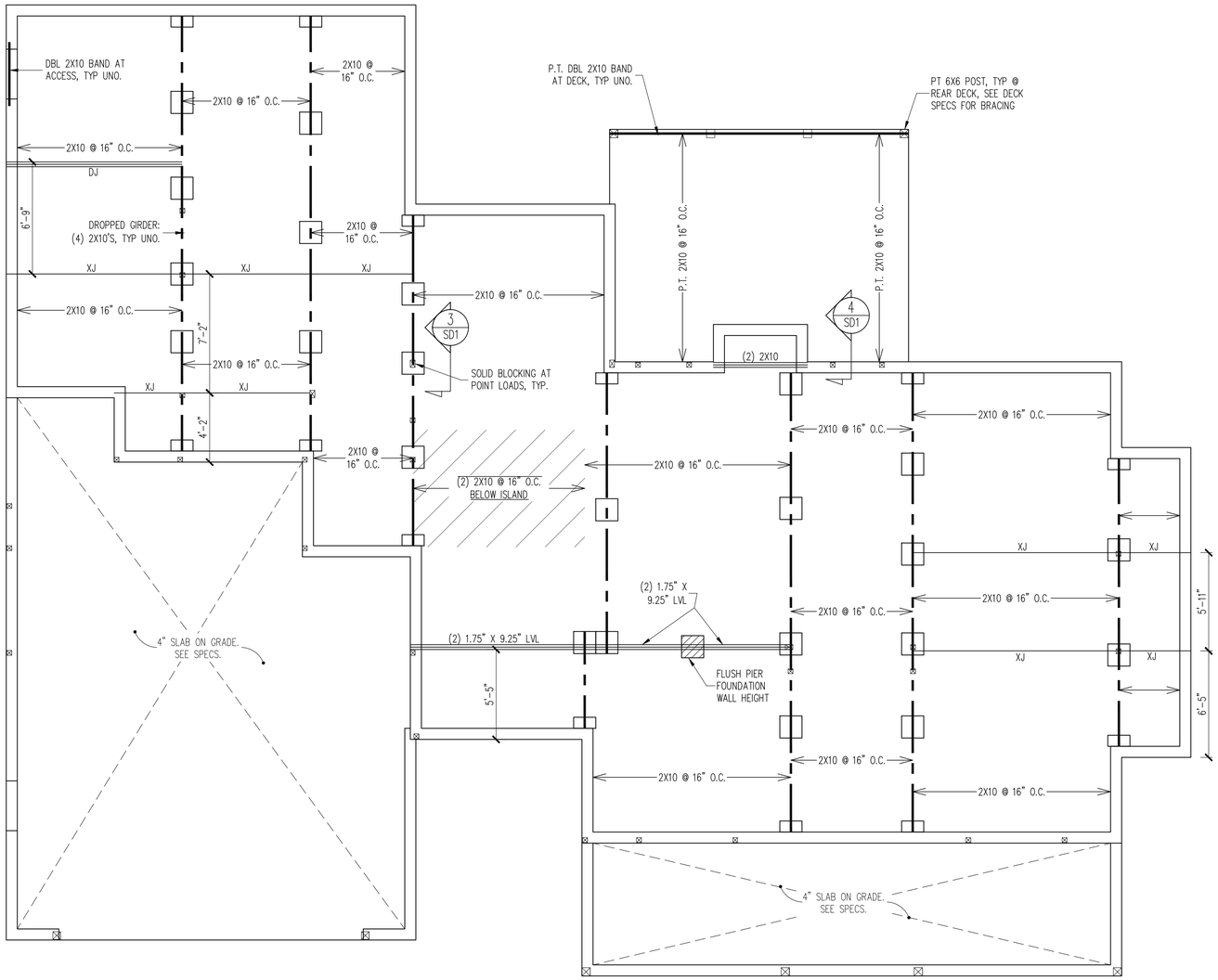

CRAWLSPACE FRAMING PLAN

1/4" = 1'-0"

The structural design of this plan is the property of Engineering Tech Associates, P.A. These plans are for the one time use at the location and for the client listed. Engineering Tech Associates, P.A. assumes no liability for these plans if they are reproduced, in whole or in part, for construction at any other location without written permission from Engineering Tech Associates, P.A.

NORTH CAROLINA PROFESSIONAL SEAL 035020 ENGINEER RALPH J. STG

Engineering Tech ASSOCIATES, P.A.
STRUCTURAL ENGINEERS
License No. C-3870
318 W Millbrook Rd. Unit 201
Raleigh, North Carolina 27609
Phone (919) 844-1661

TRABAR HOMES, LLC
STRUCTURAL ADDENDUM

REV #	REF PROJ #	DATE

SCOPE:
LOC: 21 RANGEWOOD

ENG: PAL/RJS
DATE: 05/19/2025

PARENT
M052-25

PROJECT NO.
25-21-099

SHEET NO.
S2

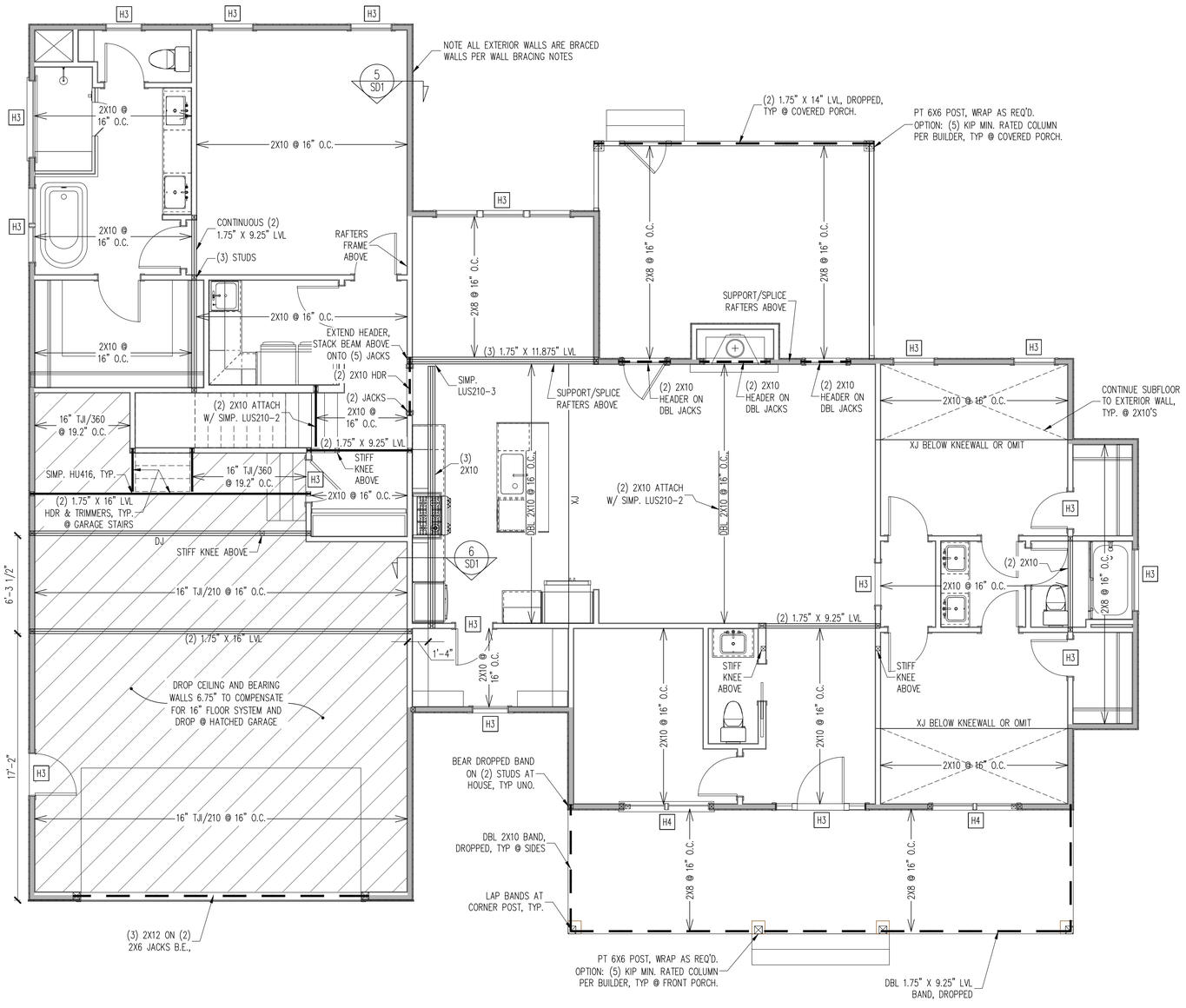

CONSTRUCTION SPECIFICATIONS

INSTANT REFERENCES

REFER TO THE CONSTRUCTION SPECIFICATIONS SECTIONS FOR THE FOLLOWING INFORMATION:

PART 1.01: CURRENT GOVERNING CODE

PART 14: STUD SUPPORT FOR BEAMS

PART 17: KING STUDS FOR EXTERIOR WALLS

SEE DETAIL / CONSTRUCTION SPECIFICATIONS SHEETS FOR I-JOISTS ALLOWABLE SUBSTITUTIONS

HEADER SCHEDULE

H1 SINGLE 2X4 TURNED FLAT (A)

H2 (2) 2X4'S ON SINGLE JACKS (B)

H3 (2) 2X10'S ON SINGLE JACKS (C)

H4 (2) 1.75" X 9.25" LVL'S ON DBL JACKS

H5 (3) 2X10'S ON SINGLE 2X6 JACKS

H6 (3) 1.75" X 9.25" LVL'S ON DBL 2X6 JACKS

(A) TYPICAL FOR INTERIOR NON LOAD BEARING WALLS ONLY, ROUGH OPENING 38" MAX.

(B) TYPICAL FOR INTERIOR NON LOAD BEARING WALLS ONLY, ROUGH OPNG 38" TO 74" MAX.

(C) TYPICAL FOR ALL CONDITIONS NOT LISTED IN (A) OR (B) UNO.

NOTES:
-HEADERS IN NON LOAD BEARING INTERIOR WALLS ARE NOT LABELED.

WALL BRACING

SHADED WALLS:

ALL EXTERIOR STUD WALLS, EXTERIOR SIDE, ARE TO BE CONTINUOUSLY SHEATHED WITH 7/16 APA RATED OSB NAILED TO STUDS WITH 8d NAILS @ 6" O.C. AT PANEL EDGES, 12" O.C. IN PANEL FIELD.

NOTES:
PROVIDED CONTINUOUS SHEATHING = 266' MIN.

REFERENCE PART 16.02 OF CONSTRUCTION SPECIFICATIONS FOR GENERAL WIND BRACING INFORMATION.

1ST FLOOR FRAMING PLAN

WALLS AND CEILING
1/8" = 1'-0"

The structural design of this plan is the property of Engineering Tech Associates, P.A. These plans are for the one time use at the location and for the client listed. Engineering Tech Associates, P.A. assumes no liability for these plans if they are reproduced, in whole or in part, for construction at any other location without written permission from Engineering Tech Associates, P.A.

NORTH CAROLINA PROFESSIONAL SEAL 035020 ENGINEER RALPH J. STG

Engineering Tech ASSOCIATES, P.A.
STRUCTURAL ENGINEERS
License No. C-3870
318 W Millbrook Rd. Unit 201
Raleigh, North Carolina 27609
Phone (919) 844-1661

TRABAR HOMES, LLC
STRUCTURAL ADDENDUM

REV #	REF PROJ #	DATE

SCOPE:
LOC: 21 RANGEWOOD

ENG: PAL/RJS
DATE: 05/19/2025

PARENT
M052-25

PROJECT NO.
25-21-099

SHEET NO.
S3

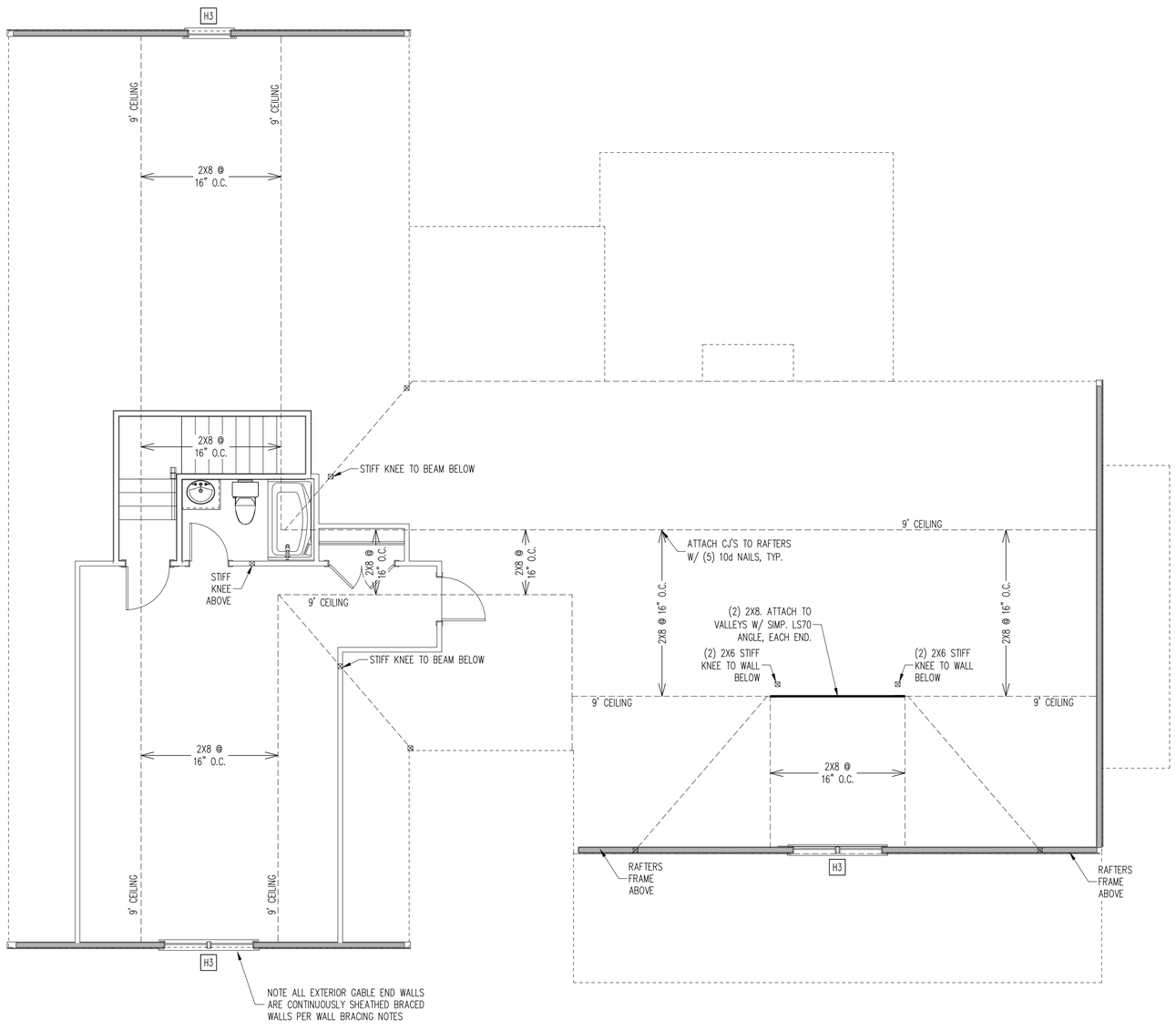

CONSTRUCTION SPECIFICATIONS

INSTANT REFERENCES

REFER TO THE CONSTRUCTION SPECIFICATIONS SECTIONS FOR THE FOLLOWING INFORMATION:

PART 1.01: CURRENT GOVERNING CODE

PART 14: STUD SUPPORT FOR BEAMS

PART 17: KING STUDS FOR EXTERIOR WALLS

SEE DETAIL / CONSTRUCTION SPECIFICATIONS SHEETS FOR I-JOISTS ALLOWABLE SUBSTITUTIONS

HEADER SCHEDULE

H1 SINGLE 2X4 TURNED FLAT (A)

H2 (2) 2X4'S ON SINGLE JACKS (B)

H3 (2) 2X10'S ON SINGLE JACKS (C)

H4 (2) 1.75" X 9.25" LVL'S ON DBL JACKS

H5 (3) 2X10'S ON SINGLE 2X6 JACKS

H6 (3) 1.75" X 9.25" LVL'S ON DBL 2X6 JACKS

(A) TYPICAL FOR INTERIOR NON LOAD BEARING WALLS ONLY, ROUGH OPENING 38" MAX.

(B) TYPICAL FOR INTERIOR NON LOAD BEARING WALLS ONLY, ROUGH OPNG 38" TO 74" MAX.

(C) TYPICAL FOR ALL CONDITIONS NOT LISTED IN (A) OR (B) UNO.

NOTES:
-HEADERS IN NON LOAD BEARING INTERIOR WALLS ARE NOT LABELED.

WALL BRACING

SHADED WALLS:

ALL EXTERIOR STUD WALLS, EXTERIOR SIDE, ARE TO BE CONTINUOUSLY SHEATHED WITH 7/16 APA RATED OSB NAILED TO STUDS WITH 8d NAILS @ 6" O.C. AT PANEL EDGES, 12" O.C. IN PANEL FIELD.

NOTES:
PROVIDED CONTINUOUS SHEATHING = 107' MIN.

REFERENCE PART 16.02 OF CONSTRUCTION SPECIFICATIONS FOR GENERAL WIND BRACING INFORMATION.

2ND FLOOR FRAMING PLAN

WALLS AND CEILING
1/8" = 1'-0"

The structural design of this plan is the property of Engineering Tech Associates, P.A. These plans are for the one time use at the location and for the client listed. Engineering Tech Associates, P.A. assumes no liability for these plans if they are reproduced, in whole or in part, for construction at any other location without written permission from Engineering Tech Associates, P.A.

NORTH CAROLINA PROFESSIONAL SEAL 035020 ENGINEER RALPH J. STG III

Engineering Tech ASSOCIATES, P.A.
STRUCTURAL ENGINEERS
License No. C-3870
318 W Millbrook Rd. Unit 201
Raleigh, North Carolina 27609
Phone (919) 844-1661

SCOPE: TRABAR HOMES, LLC
STRUCTURAL ADDENDUM

LOC: 21 RANGEWOOD

REV #	REF PROJ #	DATE

ENG: PAL/RJS
DATE: 05/19/2025

PARENT
M052-25

PROJECT NO.
25-21-099

SHEET NO.
S4

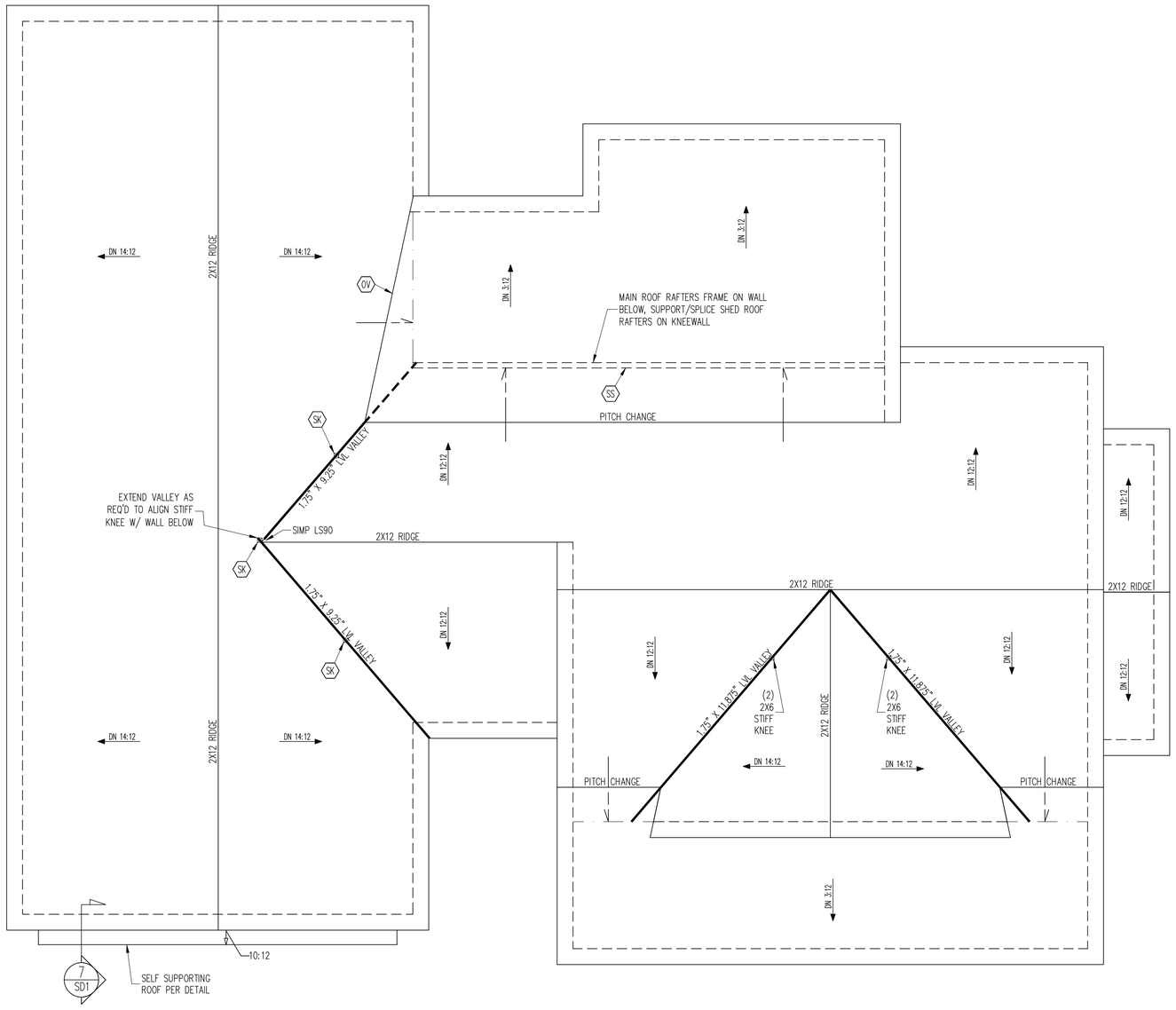

FRAMING NOTES

ROOF ONLY

- COMMON RAFTERS 2X8 @ 16" O.C. TYP U.N.O.
- COLLAR TIES 2X4 EVERY 3RD SET OF RAFTERS TYP U.N.O.
- VERIFY ROOF PITCHES, OVERHANG LENGTHS, AND KNEEWALL FRAMING HGTS WITH ARCHITECTURAL DRAWINGS, TYPICAL.

FRAMING SCHEDULE

ROOF ONLY

OV	OVERFRAME VALLEY (2X10 SLEEPER)
SK	DBL 2X4 STIFF KNEE
SS	SUPPORT/SPLICE RAFTERS ON KNEEWALL BELOW

ROOF FRAMING PLAN

1/4" = 1'-0"

The structural design of this plan is the property of Engineering Tech Associates, P.A. These plans are for the one time use at the location and for the client listed. Engineering Tech Associates, P.A. assumes no liability for these plans if they are reproduced, in whole or in part, for construction at any other location without written permission from Engineering Tech Associates, P.A.

NORTH CAROLINA PROFESSIONAL SEAL 035020 ENGINEER RALPH J. STG

Engineering Tech ASSOCIATES, P.A.
STRUCTURAL ENGINEERS
License No. C-3870
318 W Millbrook Rd. Unit 201
Raleigh, North Carolina 27609
Phone (919) 844-1661

TRABAR HOMES, LLC
STRUCTURAL ADDENDUM

REV #	REF PROJ #	DATE

SCOPE:
LOC: 21 RANGEWOOD

ENG: PAL/RJS
DATE: 05/19/2025

PARENT
M052-25

PROJECT NO.
25-21-099

SHEET NO.
S5

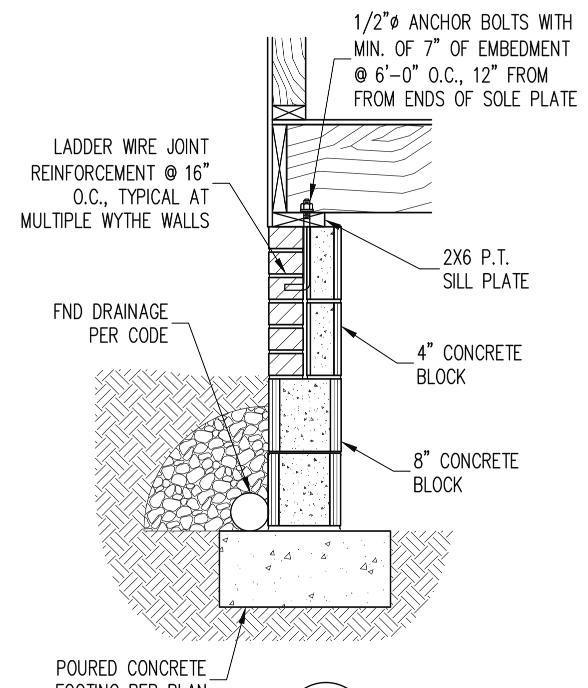

1 / S1 SECTION
TYPICAL FND WALL
3/4" = 1'-0"

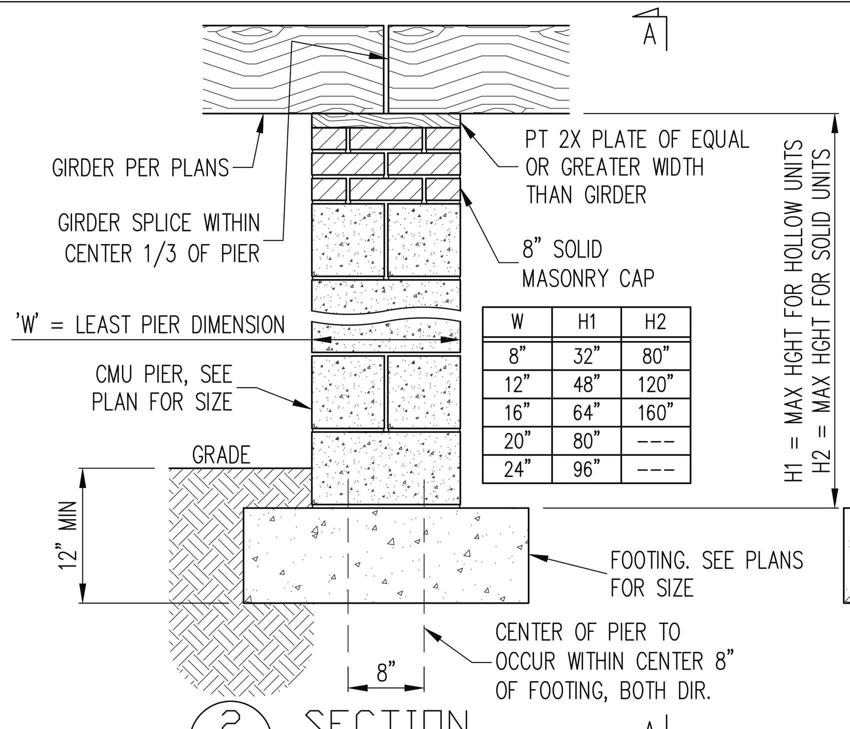

2 / S1 SECTION
TYPICAL MASONRY PIER, GIRDER
3/4" = 1'-0"

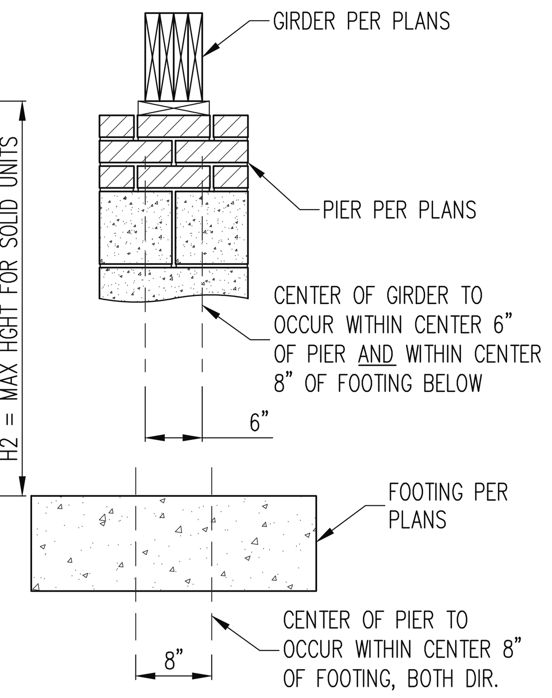

SECTION A-A
3/4" = 1'-0"

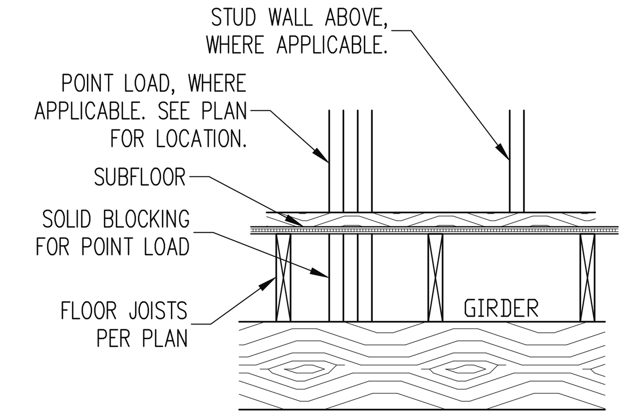

3 / S2 SECTION
TYPICAL DROPPED GIRDER
3/4" = 1'-0"

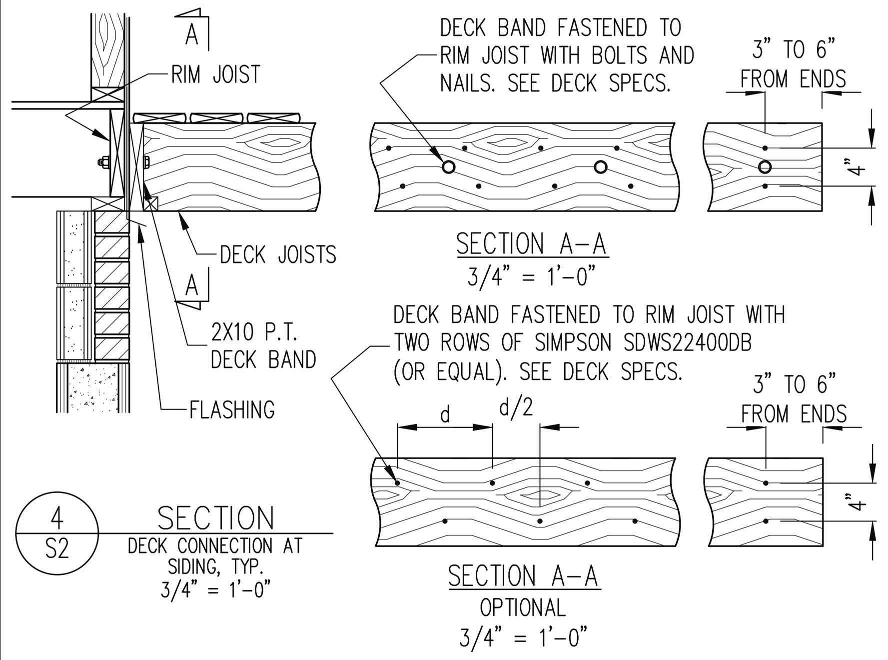

4 / S2 SECTION
DECK CONNECTION AT SIDING, TYP.
3/4" = 1'-0"

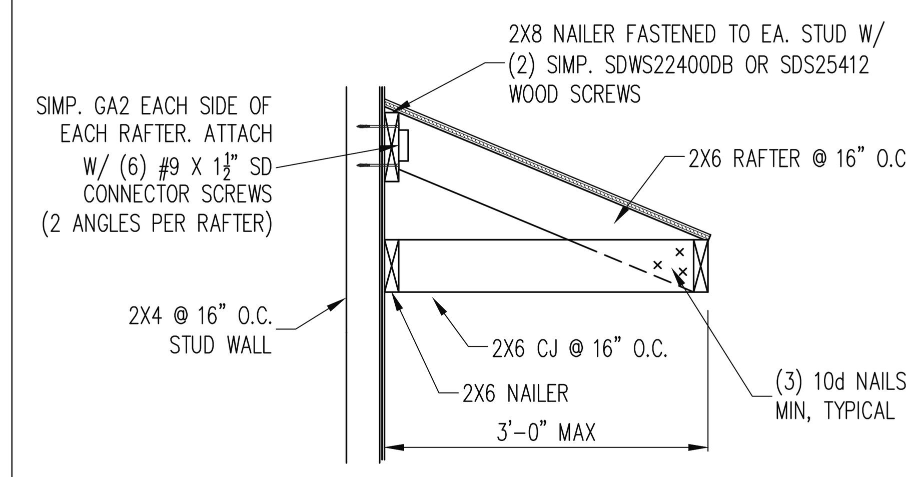

7 / S5 SECTION
WATER TABLE ATTACHMENT, TYP.
3/4" = 1'-0"

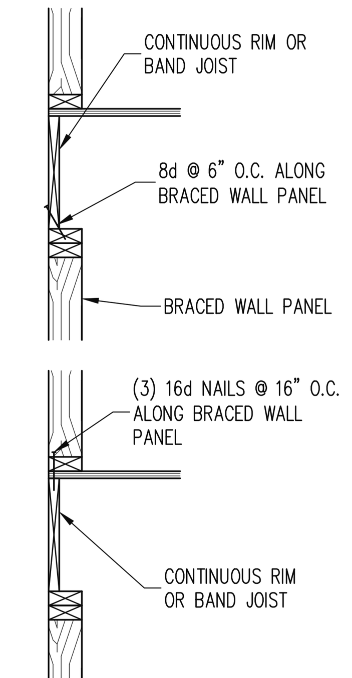

5 / S3 SECTION
TYPICAL BRACED WALL PANEL CONNECTION AT EXTERIOR WALL, JOISTS PERPENDICULAR OR PARALLEL.
3/4" = 1'-0"

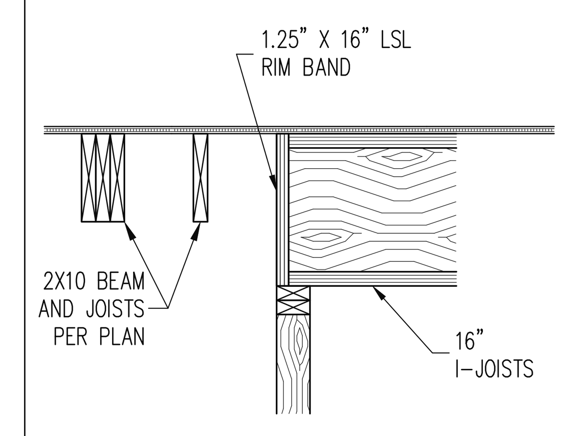

6 / S3 SECTION
FRAMING AT JOIST SIZE TRANSITION
1/2" = 1'-0"

CONSTRUCTION SPECIFICATIONS

PART 1: GENERAL

1.01 CONSTRUCTION SHALL MEET THE REQUIREMENTS OF THE NORTH CAROLINA RESIDENTIAL CODE, 2018 EDITION.

1.02 DIMENSIONS SHOWN SHALL GOVERN OVER SCALE ON THESE DRAWINGS.

1.05 METHODS, PROCEDURES AND SEQUENCES OF CONSTRUCTION ARE THE RESPONSIBILITY OF THE CONTRACTOR, WHO SHALL TAKE ALL NECESSARY PRECAUTIONS TO MAINTAIN AND INSURE THE INTEGRITY OF THE STRUCTURE AT ALL STAGES OF CONSTRUCTION.

PART 2: DESIGN LOADS

2.01 DESIGN LOADS SHALL CONFORM WITH THE TABLE BELOW:

USE	LIVE LOAD (PSF)	DEAD LOAD (PSF)
BALCONIES, DECKS, ATTICS WITH FIXED STAIR ACCESS, DWELLING UNITS INCLUDING ATTICS WITH FIXED STAIR ACCESS, STAIRS, FIRE ESCAPES	40	10
GARAGES (PASSENGER CARS ONLY)	50	--
ATTICS (NO STORAGE, LESS THAN 5' HEADROOM)	10	10
ATTICS (WITH STORAGE)	20	10
ROOF	20	10 (15 FOR VAULTS)

NOTES: - INDIVIDUAL STAIR TREADS ARE TO BE DESIGNED FOR THE UNIFORMLY DISTRIBUTED LIVE LOAD OF 40 PSF OR A 300 LB. CONCENTRATED LOAD ACTING OVER AN AREA OF 4 SQ. WHICHEVER PRODUCES THE GREATER STRESS.
- BUILDER TO VERIFY DEAD LOAD DOES NOT EXCEED 10 PSF WHEN HEAVY FLOOR OR ROOF FINISHES SUCH AS TILE OR SLATE ARE UTILIZED. NOTIFY ENGINEERING UNDER THESE CONDITIONS

2.02 INTERIOR WALLS: 5 PSF LATERAL.

2.03 BASIC WIND DESIGN VELOCITY OF 115 MPH.

2.04 SOIL BEARING CAPACITY 2000 PSF (PRESUMPTIVE).

PART 3: STRUCTURAL STEEL

3.01 WIDE FLANGE BEAMS AND TEE SECTIONS SHALL CONFORM TO ASTM A992 MINIMUM GRADE

3.02 SQUARE AND RECTANGULAR TUBING SHALL CONFORM TO ASTM A500 GRADE B MINIMUM GRADE.

3.03 STEEL PIPE SHALL CONFORM TO ASTM A53 GRADE B, TYPE S, MINIMUM GRADE

3.04 ALL OTHER STRUCTURAL STEEL SHALL CONFORM TO ASTM A36 MINIMUM GRADE

3.05 STRUCTURAL STEEL CONSTRUCTION SHALL MEET THE REQUIREMENTS OF THE AISC SPECIFICATION FOR THE DESIGN, FABRICATION AND ERECTION OF STRUCTURAL STEEL FOR BUILDINGS.

PART 4: WELDING

4.01 WELDING ELECTRODES SHALL BE E70XX AND ALL WELDING SHALL BE PERFORMED BY AN AWS CERTIFIED WELDER

PART 5: CONCRETE AND SLABS ON GRADE

5.01 CAST IN PLACE CONCRETE SHALL BE OF NORMAL WEIGHT, 4-6% AIR ENTRAINMENT, FOR EXTERIOR CONCRETE AND SHALL HAVE A MINIMUM COMPRESSIVE STRENGTH OF 3000 PSI AT 28 DAYS TYP UNO. ALL ITEMS NOTED AS 'CONCRETE' ARE TO BE CAST IN PLACE, TYP UNO.

5.02 REINFORCED CAST IN PLACE CONCRETE SHALL BE PROPORTIONED, MIXED AND PLACED IN ACCORDANCE WITH THE SPECIFICATIONS OF ACI 318, LATEST EDITION.

5.03 SLABS ON GRADE, IF ANY, SHALL BE CAST IN PLACE, CONTAIN SYNTHETIC POLYPROPYLENE FIBRILLATED MICRO FIBERS, FIBER LENGTH 1 1/2", DOSAGE RATE 1 1/2 LBS/CU YD. SLAB TO BE PLACED ON A 6 MIL VAPOR BARRIER ON 4" MIN GRANULAR FILL ON SOIL WITH 90% MIN STANDARD PROCTOR DENSITY. VAPOR BARRIER MAY BE OMITTED FOR SLABS NOT IN ENCLOSED AREAS

PART 6: REBAR AND WIRE REINFORCEMENT

6.01 REBAR SHALL BE DEFORMED STEEL CONFORMING TO ASTM A615 GRADE 60 TYP UNO

6.02 LAP SPLICES SHALL BE CLASS B AS DEFINED BY ACI 318, TYP UNO. STAGGER ADJACENT SPLICES A MINIMUM OF ONE LAP LENGTH

6.03 WIRE REINFORCEMENT SHALL BE 9 GA AND SHALL CONFORM TO ASTM A1064.

PART 7: MASONRY

7.01 CONCRETE MASONRY UNITS SHALL CONFORM TO ASTM C90 AND C55, NORMAL WEIGHT, f'M = 1,500 PSI MIN

7.02 CLAY MASONRY UNITS SHALL CONFORM TO ASTM C62-17 GRADE SW

7.03 MORTAR SHALL BE TYPE S. MORTAR AND GROUT SHALL CONFORM TO ASTM C476, MIN COMPRESSIVE STRENGTH OF 2000 PSI.

7.04 MASONRY CONSTRUCTION SHALL CONFORM TO THE SPECIFICATIONS OF ACI 530

7.05 LADDER WIRE REINFORCEMENT SHALL CONFORM TO ASTM A951. 6" MIN LAPS FOR CONTINUOUS WALL APPLICATIONS

PART 8: BOLTS AND LAG SCREWS

8.01 BOLTS SHALL CONFORM TO ASTM A307 MINIMUM GRADE TYP UNO. INSTALL USS STEEL WASHERS (ASTM F844-07a) FOR THE NUT / BOLT HEAD WHEN BOLTING WOOD MEMBERS. HOLES FOR BOLTS SHALL BE AISC STANDARD HOLES UNO

8.02 LAG SCREWS SHALL CONFORM TO ANSI/ASME STANDARD B18.2.1-1981. PILOT HOLES SHALL BE USED FOR LAG SCREW INSTALLATION AND SHALL BE BORED ACCORDING TO NDS SPECIFICATIONS. INSTALL STANDARD STEEL WASHERS (ASTM F844-07a) FOR SCREW HEAD

8.03 ANCHOR RODS AND BOLTS SHALL CONFORM TO ASTM F1554-15 GRADE 36 UNO. BENT ANCHOR BOLTS SHALL HAVE A 2" MIN HOOK UNO

PART 9: DRIVEN FASTENERS

9.01 NAILS, SPIKES AND STAPLES SHALL CONFORM TO ASTM F 1667- 05. NAILS ARE TO BE COMMON WIRE OR BOX

PART 10: DIMENSIONAL LUMBER

10.01 SOLID SAWN WOOD FRAMING DESIGN IS BASED ON NO. 2 SPRUCE PINE FIR OR SYP #2 FOR JOISTS, RAFTERS, GIRDERS, BEAMS, STUDS, ETC. MINIMUM ALLOWABLE DESIGN PROPERTIES ARE AS FOLLOWS:
E= 1,400,000 PSI, $F_{c\ perp}$ = 425 PSI, F_v = 135 PSI, SPECIFIC GRAVITY = 0.42 MIN
F_b = 875 PSI FOR 2X4, 2X6, 2X8. F_b = 800 PSI FOR 2X10'S, 750 PSI FOR 2X12'S

PART 11: ENGINEERED LUMBER

11.01 LVL OR PSL MINIMUM ALLOWABLE DESIGN PROPERTIES ARE AS FOLLOWS:
E= 1,900,000 PSI, F_b = 2600 PSI, F_v = 285 PSI, $F_{c\ perp}$ = 750 PSI
LSL MINIMUM ALLOWABLE DESIGN STRESSES ARE AS FOLLOWS:
E= 1.3 X 10E6 PSI, F_b = 1700 PSI, F_v = 400 PSI, $F_{c\ perp}$ = 680 PSI

11.02 LVL OR PSL MEMBERS MAY BE RIPPED FROM DEEPER MEMBERS TO MATCH THE MEMBER DEPTH SPECIFIED IN THE PLANS. MAY SUBSTITUTE PSL AND LVL FOR EACH OTHER UNO

PART 12: PRESSURE TREATED LUMBER

12.01 LUMBER IN CONTACT WITH THE GROUND, CONCRETE OR MASONRY SHALL BE PRESSURE TREATED IN ACCORDANCE WITH AWPA STANDARD C-15. ALL OTHER EXPOSED LUMBER SHALL BE TREATED IN ACCORDANCE WITH AWPA STANDARD C-2 OR BY ANY METHOD GIVING EQUAL PROTECTION. THE BUILDING CODE OFFICE MAY ALSO APPROVE A NATURAL DECAY RESISTANT WOOD PER SECTION 19-6(A)

PART 13: STEEL FLITCH PLATE BEAMS

13.01 FLITCH PLATE BEAMS SHALL CONSIST OF A CONTINUOUS STEEL PLATE BOLTED BETWEEN TWO PIECES OF CONTINUOUS LUMBER AS SIZED ON THE PLANS. BOLT PIECES TOGETHER USING 1/2" ø BOLTS SPACED AT 16" O.C. STAGGERED TOP TO BOTTOM OF THE BEAM. MAINTAIN A 2" EDGE DISTANCE. PLACE TWO BOLTS, ONE ABOVE THE OTHER, 16" MAX FROM EACH END OF THE BEAM. TYP UNO

PART 14: STUD SUPPORTS FOR BEAMS

14.01 STEEL, ENGINEERED LUMBER, AND FLITCH PLATE BEAMS BEARING ON A STUD WALL SHALL BEAR AS FOLLOWS:

1-WHEN THE BEAM IS PERPENDICULAR TO, OR SKEWED RELATIVE TO THE WALL, THE BEAM SHALL BEAR FULL WIDTH ON THE SUPPORTING WALL INDICATED AND SHALL BE SUPPORTED BY A MINIMUM OF THREE GANGED STUDS, OR A GANGED STUD COLUMN WITH A NUMBER OF STUDS SUCH THAT THE STUD COLUMN IS AT LEAST AS WIDE AS THE TRUE WIDTH OF THE BEAM BEING SUPPORTED, WHICHEVER IS GREATER, TYP UNO. FOR THE SKEWED CONDITION PARTICULAR CARE SHALL BE TAKEN TO ENSURE STUD COLUMN IS CENTERED ON THE BEAM
2-BEAMS BEARING ONTO THE END OF A STUD WALL PARALLEL TO THE BEAM SHALL BEAR A MINIMUM OF 4 1/2" ONTO THE WALL AND BE SUPPORTED BY A TRPL STUD GANGED COLUMN TYP UNO.

14.02 DIMENSIONAL LUMBER BEAMS BEARING ON A STUD WALL SHALL BEAR AS FOLLOWS:

1-WHEN THE BEAM IS PERPENDICULAR TO, OR SKEWED RELATIVE TO THE WALL, THE BEAM SHALL BEAR FULL WIDTH ON THE SUPPORTING WALL INDICATED (LESS 1 1/2" TO ALLOW FOR A CONTINUOUS RIM JOIST WHERE APPLICABLE) AND SHALL BE SUPPORTED BY A GANGED STUD COLUMN THE SAME WIDTH AS THE BEAM TYP UNO. (E.G. A TRIPLE 2X10 IS TO BE SUPPORTED BY (3) STUDS). FOR THE SKEWED CONDITION PARTICULAR CARE SHALL BE TAKEN TO ENSURE STUD COLUMN IS CENTERED ON THE BEAM
2-BEAMS BEARING ONTO THE END OF A STUD WALL PARALLEL TO THE BEAM SHALL BEAR A MINIMUM OF 3" ONTO THE WALL AND BE SUPPORTED BY A DBL STUD GANGED COLUMN TYP UNO.

14.03 EXTRA JOISTS BEARING ON A STUD WALL PERPENDICULAR TO OR SKEWED RELATIVE TO THE BEAM SHALL BE SUPPORTED BY ONE ADDITIONAL STUD.

14.04 STUDS THAT ARE GANGED TO FORM A COLUMN SHALL HAVE ADJACENT STUDS WITHIN THE COLUMN NAILED TOGETHER WITH ONE ROW OF 10d NAILS AT 8" O.C. (TWO ROWS OF 10d NAILS @ 8" O.C., 3" APART, FOR 2X8 OR 2X10 STUDS) ALL COLUMNS SHALL BE CONTINUOUS DOWN TO THE FOUNDATION OR OTHER PROPERLY DESIGNED STRUCTURAL ELEMENT SUCH AS A BEAM. COLUMNS TRANSFERRING LOADS THROUGH FLOOR LEVELS SHALL BE SOLIDLY BLOCKED FOR THE FULL WIDTH OF THE STUD COLUMN WITHIN THE CAVITY FORMED BY THE FLOOR JOISTS.

PART 15: NAILING OF MULTI PLY WOOD BEAMS

15.01 SOLID SAWN LUMBER JOISTS THAT ARE GANGED TO FORM A BEAM SHALL HAVE ADJACENT MEMBERS IN THE BEAM NAILED TOGETHER WITH THREE ROWS OF 10d NAILS @ 16" O.C. FOR 2X10 OR LARGER, TWO ROWS OF 10d NAILS @ 16" O.C. FOR 2X8, ONE ROW OF 10d NAILS @ 16" O.C. FOR 2X6 OR SMALLER. STAGGER ROWS 5" MIN.

15.02 LVL MEMBERS THAT ARE GANGED TO FORM A BEAM SHALL HAVE ADJACENT MEMBERS IN THE BEAM FASTENED TOGETHER PER MANUFACTURERS RECOMMENDATIONS, TYP UNO

PART 16: WALL FRAMING AND BRACING

16.01 STUD WALLS SHALL CONSIST OF 2X4 STUDS SPACED AT 16" O.C. UNO. STUDS SHALL BE CONTINUOUS FROM SOLE PLATE AT FLOOR TO DOUBLE TOP PLATE AT THE CEILING OR ROOF. NO INTERMEDIATE BANDS OR PLATES SHALL CAUSE DISCONTINUITIES IN A STUD WALL EXCEPT AS REQUIRED FOR DOOR OR WINDOW OPENINGS. THE KING STUDS FOR SUCH OPENINGS SHALL BE CONTINUOUS, TYP UNO.
MAX ALLOWABLE WALL HEIGHTS FOR EXTERIOR STUD WALLS, INCLUSIVE OF SOLE PLATE AND DBL TOP PLATE AND 7/16" OSB EXTERIOR BRACING AND ROW OF 2X4 2X6 PURLINS AT 8' HEIGHT (AND AT 16' HEIGHT FOR TALL WALLS), TYP UNO:
2X4 @ 16" O.C.: 11'-1 1/2" 2X6 @ 16" O.C.: 17'-0"
2X4 @ 12" O.C.: 12'-1 1/2" 2X6 @ 12" O.C.: 18'-8"
DBL 2X4 @ 16" O.C.: 13'-4" DBL 2X6 @ 16" O.C.: 21'-0"

16.02 FOR WALL BRACING THE FOLLOWING SHALL APPLY:
-BLOCKING AT UNSUPPORTED PANEL EDGES IS REQUIRED TYP UNO.
-WALL BRACING IS BY ENGINEERED DESIGN AND NOT PRESCRIPTIVE PER SECTION 602.10 OF THE 2018 NCRC. CONTINUOUS SHEATHING HAS BEEN PROVIDED, ALONG WITH ALTERNATIVE METHODS TO INSURE THE MINIMUM INTENT OF SECTION 602.10 OF THE 2018 NCRC HAS BEEN MET AND EXCEEDED.
-BRACED WALL PANELS SHALL BE FASTENED IN ACCORDANCE WITH TABLE 602.3(1) TO PROVIDE CONTINUOUS PANEL UPLIFT RESISTANCE AND COMPLIANCE WITH NCRBC R602.3.5 AND R802.11 UNLESS NOTED OTHERWISE ON STRUCTURAL PLANS.
-MAY SUBSTITUTE WSP FOR GB
-SINGLE JOIST, CONTINUOUS RIM JOIST, OR BLOCKING OF EQUAL DEPTH IS REQUIRED ABOVE AND BELOW ALL BRACED WALLS. NAIL BLOCKING ABOVE WALL TO TOP PLATE WITH 16d TOE NAILS @ 6" O.C. NAIL SOLE PLATE OF BRACED WALL TO BLOCKING BELOW WITH (3) 16d NAILS @ 16" O.C. BLOCKING AT HORIZONTAL JOINTS IN BRACED WALL LINES ONLY REQUIRED AT SHADED WALLS, UNO.

PART 17: KING STUDS

17.01 KING STUDS FOR OPENINGS IN EXTERIOR WALLS SHALL BE AS FOLLOWS:

		NUMBER OF KING STUDS				
MAX OPENING WIDTH		5'-0"	9'-0"	13'-0"	17'-0"	21'-0"
STUD SIZE	2X4	1	2	3	4	5
	2X6	1	1	2	2	2
	2X8	1	1	1	1	2

PART 18: SUBSTITUTIONS

18.01 MATERIAL OR MEMBER SIZE SUBSTITUTIONS OR PLAN DEVIATIONS REQUIRE THE WRITTEN AUTHORIZATION OF THE DESIGNERS. UNAUTHORIZED DEVIATIONS ARE THE SOLE RESPONSIBILITY OF THE CONTRACTOR.

PART 19: OWNERSHIP OF STRUCTURAL DESIGN

19.01 THE STRUCTURAL DESIGN OF THIS PLAN IS THE PROPERTY OF ENGINEERING TECH ASSOCIATES (ETA). THESE PLANS ARE FOR THE ONE TIME USE AT THE LOCATION INDICATED AND FOR THE CLIENT LISTED. ETA ASSUMES NO LIABILITY FOR THESE PLANS IF THEY ARE REPRODUCED, IN WHOLE OR IN PART, FOR CONSTRUCTION AT ANY OTHER LOCATION WITHOUT WRITTEN PERMISSION FROM ETA

NOTES

THE BUILDER IS RESPONSIBLE FOR REVIEWING PLANS PRIOR TO CONSTRUCTION. THE BUILDER SHALL IMMEDIATELY CONTACT THE ENGINEER OF RECORD (EOR) BEFORE PROCEEDING IF THE FOLLOWING CONDITIONS ARE NOTED BEFORE OR DURING CONSTRUCTION:
1) THE WORKING PLANS DO NOT BEAR THE SEAL OF THE EOR
2) THE PLANS CONTAIN DISCREPANT OR INCOMPLETE INFORMATION

ANY ERRORS DUE TO A FAILURE TO FOLLOW THE ABOVE PROCEDURES SHALL NOT BE THE RESPONSIBILITY OF THE EOR. FURTHERMORE, IT IS THE RESPONSIBILITY OF THE BUILDER TO ENSURE THAN ANY REVISIONS ISSUED BY THE EOR ARE PROMPLY DISTRIBUTED TO THE SUBCONTRACTORS

THE EOR DOES NOT PERFORM FENESTRATION OR VENTING CALCULATIONS OR ANY OTHER CALCULATIONS THAT ARE NOT DIRECTLY RELATED TO STRUCTURAL ENGINEERING.

ROOF AND FLOOR TRUSSES TO BE DESIGNED BY AN ENGINEER REGISTERED BY THE STATE. FINAL TRUSS DRAWING SHOULD BE SUBMITTED TO THE EOR FOR REVIEW

ABBREVIATIONS

ABV	ABOVE
B.	BOTH
B.E.	BOTH ENDS
BTWN	BETWEEN
CIP	CAST IN PLACE
CONC	CONCRETE
CS	CONTINUOUS SHEATHING
DIA	DIAMETER
DBL	DOUBLE
DJ	DOUBLE JOIST
DSP	DBL STUD POCKET
EQ	EQUAL
EA	EACH
FLG	FLANGE
FL PL	FLITCH PLATE
FLR	FLOOR
FND	FOUNDATION
FTG	FOOTING
HDG	HOT DIPPED GALVANIZED
HGR	HANGER
LVL	LAMINATED VENEER LUMBER
NTS	NOT TO SCALE
O.C.	ON CENTER
PSL	PARALLEL STRAND LUMBER
PT	PRESSURE TREATED
QJ	QUAD JOIST
SP	SPACE (OR SPACING)
SSP	SINGLE STUD POCKET
SQ	SQUARE
TJ	TRIPLE JOIST
TYP	TYPICAL
TRPL	TRIPLE
TSP	TRIPLE STUD POCKET
UNO	UNLESS NOTED OTHERWISE
XJ	EXTRA JOIST

DECK SPECIFICATIONS

1. A DECK IS AN EXPOSED EXTERIOR WOOD FLOOR STRUCTURE WHICH MAY BE ATTACHED TO A STRUCTURE OR BE FREE STANDING. ROOFED PORCHES, OPEN OR SCREENED IN, MAY BE CONSTRUCTED USING THESE PROVISIONS.

2. SUPPORT POSTS SHALL BE SUPPORTED BY A FOOTING.

3. WHEN ATTACHED TO A STRUCTURE, THE STRUCTURE TO WHICH ATTACHED SHALL HAVE A TREATED WOOD BAND FOR THE LENGTH OF THE DECK, OR CORROSION RESISTANT FLASHING SHALL BE USED TO PREVENT MOISTURE FROM COMING IN CONTACT WITH THE UNTREATED FRAMING OF THE STRUCTURE. THE DECK BAND AND THE STRUCTURE BAND SHALL BE CONSTRUCTED IN CONTACT WITH EACH OTHER EXCEPT AT BRICK VENEER AND WHERE PLYWOOD SHEATHING IS REQUIRED AND PROPERLY FLASHED. SIDING SHALL NOT BE INSTALLED BETWEEN THE STRUCTURE AND THE DECK BAND. IF ATTACHED TO A BRICK STRUCTURE, NEITHER FLASHING NOR A TREATED BAND FOR THE BRICK STRUCTURE IS REQUIRED. IN ADDITION, THE TREATED DECK BAND SHALL BE CONSTRUCTED IN CONTACT WITH THE BRICK

4. WHEN THE DECK IS SUPPORTED AT THE STRUCTURE BY ATTACHING THE DECK TO THE STRUCTURE, THE FOLLOWING ATTACHMENT SCHEDULES SHALL APPLY FOR ATTACHING THE DECK BAND TO THE STRUCTURE:

A. ALL STRUCTURES EXCEPT BRICK STRUCTURES

	JOIST LENGTH	
	UP TO 8' MAX.	UP TO 16' MAX.
REQUIRED FASTENERS	ONE- 5/8" ø BOLT @ 42" O.C. AND (2) ROWS OF 12d NAILS @ 8" O.C. OR TWO ROWS OF SIMPSON SDWS22400DB @ d = 32" O.C. STAGGERED	ONE- 5/8" ø BOLT @ 20" O.C. AND (3) ROWS OF 12d NAILS @ 6" O.C. OR TWO ROWS OF SIMPSON SDWS22400DB @ d = 16" O.C. STAGGERED

A . BRICK VENEER STRUCTURES

	JOIST LENGTH	
	UP TO 8' MAX.	UP TO 16' MAX.
REQUIRED FASTENERS	ONE- 5/8" ø BOLT @ 28" O.C.	ONE- 5/8" ø BOLT @ 16" O.C.

5. IF THE DECK BAND IS SUPPORTED BY A 1/2" MINIMUM MASONRY LEDGE ALONG THE FOUNDATION WALL, 5/8" ø BOLTS SPACED @ 48" O.C. MAY BE USED FOR SUPPORT.

6. OTHER MEANS OF SUPPORT, SUCH AS JOIST HANGERS, MAY BE USED TO CONNECT DECK JOISTS TO A TREATED STRUCTURE BAND

7. GIRDERS SHALL BEAR DIRECTLY ON POSTS OR BE BE CONNECTED TO THE SIDES OF POSTS WITH 2- 5/8" ø BOLTS

8. FLOOR DECKING SHALL BE NO. 2 GRADE TREATED SOUTHERN PINE OR EQUIVALENT. THE MINIMUM FLOOR DECKING THICKNESS SHALL BE AS FOLLOWS:

JOIST SPAN	DECKING
12" O.C.	1" S4S
16" O.C.	1" T&G
24" O.C.	1 1/4" S4S
32" O.C.	2" S4S

9. MAXIMUM HEIGHT OF DECK SUPPORT POSTS IS AS FOLLOWS:

POST SIZE	MAX POST HEIGHT
4X4	8'
6X6	20'
ENGINEERED	20' +

NOTES: 1) THIS TABLE IS BASED ON NO. 2 TREATED SOUTHERN PINE POSTS.
2) THIS TABLE IS BASED ON A MAXIMUM TRIBUTARY AREA OF 128 SQ. FT.
3) POST HEIGHT IS FROM TOP OF FOOTING TO BOTTOM OF GIRDER.

10. DECKS SHALL BE BRACED TO PROVIDE LATERAL STABILITY BY ONE OF THE FOLLOWING METHODS:

A. WHEN THE DECK FLOOR HEIGHT IS LESS THAN 4'-0" AND THE DECK IS ATTACHED TO THE STRUCTURE IN ACCORDANCE WITH SECTION 4, LATERAL BRACING IS NOT REQUIRED.

B. 4X4 WOOD KNEE BRACES MAY BE PROVIDED ON EACH COLUMN IN BOTH DIRECTIONS. THE KNEE BRACES SHALL ATTACH TO EACH POST AT A POINT NOT LESS THAN 1/3 OF THE POST LENGTH FROM THE TOP OF THE POST, AND THE BRACES SHALL BE ANGLED BETWEEN 45° AND 60° FROM THE HORIZONTAL. KNEE BRACES SHALL BE ATTACHED AT THE ENDS TO THE GIRDER AND THE POST WITH ONE - 5/8"ø BOLT

C. FOR FREE STANDING DECKS WITHOUT KNEE BRACES OR DIAGONAL BRACING, LATERAL STABILITY MAY BE PROVIDED BY EMBEDDING THE POSTS IN CONCRETE IN ACCORDANCE WITH THE FOLLOWING:

POST SIZE	TRIBUT. AREA	POST HEIGHT	EMB. DEPTH	CONC. DIAM.
4X4	48 SQ. FT.	4'-0"	2'-6"	1'-0"
6X6	120 SQ. FT.	6'-0"	3'-6"	1'-8"

D. 2X6 DIAGONAL VERTICAL CROSS BRACING SHALL BE PROVIDED IN TWO PERPENDICULAR DIRECTIONS FOR FREE STANDING DECKS OR PARALLEL TO THE STRUCTURE AT THE EXTERIOR COLUMN LINE FOR ATTACHED DECKS. THE BRACES SHALL BE ATTACHED TO THE POSTS WITH ONE - 5/8" ø BOLT AT EACH END OF THE BRACE.

NOTES: 1) ALL NAILS AND BOLTS ARE TO BE HOT DIPPED GALVANIZED.
2) MINIMUM EDGE DISTANCE FOR BOLTS IS 2 1/2".
3) NAILS MUST PENETRATE THE SUPPORTING STRUCTURE BAND A MINIMUM OF 1 1/2".

ALLOWABLE I-JOIST SUBSTITUTION

NOTE: MAINTAIN JOIST DEPTH, DIRECTION, AND SPACING SPECIFIED ON PLANS.

MANUFACTURER	DEPTH	SERIES	SIMPSON FACE MOUNT HGR	SIMPSON TOP FLANGE HGR
BLUELINX	11.875"	BLI 40	IUS2.56/11.88	ITS2.56/11.88
BOISE CASCADE	11.875"	BCI 5000s	IUS2.06/11.88	ITS2.06/11.88
BOISE CASCADE	11.875"	BCI 6000s	IUS2.37/11.88	ITS2.37/11.88
INTERNATIONAL BEAMS	11.875"	IB 400	IUS2.56/11.88	ITS2.56/11.88
LP CORP	11.875"	LPI 20+	IUS2.56/11.88	ITS2.56/11.88
NORDIC	11.875"	NI 40X	IUS2.56/11.88	ITS2.56/11.88
ROSEBURG	11.875"	RFPI 40s	IUS2.56/11.88	ITS2.56/11.88
WEYERHAEUSER	11.875"	TJI 210	IUS2.06/11.88	ITS2.06/11.88
WEYERHAEUSER	11.875"	EEI-20	IUS2.37/11.88	ITS2.37/11.88
BLUELINX	14"	BLI 40	IUS2.56/14	ITS2.56/14
BOISE CASCADE	14"	BCI 5000s	IUS2.06/14	ITS2.06/14
BOISE CASCADE	14"	BCI 6000S	IUS2.37/14	ITS2.37/14
LP CORP	14"	LPI 20+	IUS2.56/14	ITS2.56/14
NORDIC	14"	NI 40X	IUS2.56/14	ITS2.56/14
ROSEBURG	14"	RFPI 40s	IUS2.56/14	ITS2.56/14
WEYERHAEUSER	14"	TJI 210	IUS2.06/14	ITS2.06/14
WEYERHAEUSER	14"	EEI-20	IUS2.37/14	ITS2.73/14
BLUELINX	14"	BLI 80	IUS3.56/14	ITS3.56/14
LP CORP	14"	LPI 42+	IUS3.56/14	ITS3.56/14
NORDIC	14"	NI-80	IUS3.56/14	ITS3.56/14
ROSEBURG	14"	RFPI 80s	IUS3.56/14	ITS3.56/14
WEYERHAEUSER	14"	TJI 360	IUS2.37/14	ITS2.37/14
WEYERHAEUSER	14"	EEI-20	IUS3.56/14	ITS3.56/14
BLUELINX	16"	BLI 40	IUS2.56/16	ITS2.56/16
BLUELINX	16"	BLI 60	IUS2.56/16	ITS2.56/16
BOISE CASCADE	16"	BCI 5000s	IUS2.06/16	ITS2.06/16
BOISE CASCADE	16"	BCI 6000S	IUS2.37/16	ITS2.37/16
INTERNATIONAL BEAMS	16"	IB 600	IUS2.56/16	ITS2.56/16
LP CORP	16"	LPI 20+	IUS2.56/16	ITS2.56/16
NORDIC	16"	NI 40X	IUS2.56/16	ITS2.56/16
ROSEBURG	16"	RFPI 60S	IUS2.56/16	ITS2.56/16
WEYERHAEUSER	16"	TJI 210	IUS2.06/16	ITS2.06/16
BOISE CASCADE	16"	BCI 60s	IUS2.37/16	ITS2.37/16
LP CORP	16"	LP 36	IUS2.37/16	ITS2.37/16
LP CORP	16"	LP 42+	IUS2.56/16	ITS2.56/16
NORDIC	16"	NI 70	IUS2.56/16	ITS2.56/16
ROSEBURG	16"	RFPI 70	IUS2.37/16	ITS2.37/16
WEYERHAEUSER	16"	TJI 360	IUS2.37/16	ITS2.37/16
WEYERHAEUSER	16"	EEI-30	IUS2.37/16	ITS2.73/16

JOISTS NOT LISTED IN THE ABOVE TABLE MAY BE USED PROVIDED THEY MEET OR EXCEED THE PROPERTIES OF THOSE LISTED. SUBSTITUTE USP BRAND HANGERS WITH EQUIVALENT VALUES AS DESIRED.

The structural design of this plan is the property of Engineering Tech Associates, P.A. These plans are for the one time use at the location and for the client listed. Engineering Tech Associates, P.A. assumes no liability for these plans if they are reproduced, in whole or in part, for construction at any other location without written permission from Engineering Tech Associates, P.A.

NORTH CAROLINA
SEAL
035020
ENGINEER
RALPH J. SIGLER III

Engineering Tech ASSOCIATES, P.A.
STRUCTURAL ENGINEERS
License No. C-3870
318 W Millbrook Rd. Unit 201
Raleigh, North Carolina 27609
Phone (919) 844-1661

TRABAR HOMES, LLC

SCOPE: STRUCTURAL ADDENDUM

LOC: 21 RANGEWOOD

REV #	REF PROJ #	DATE

ENG: PAL/RJS

DATE: 05/19/2025

PARENT
M052-25

PROJECT NO.
25-21-099

SHEET NO.
SD1