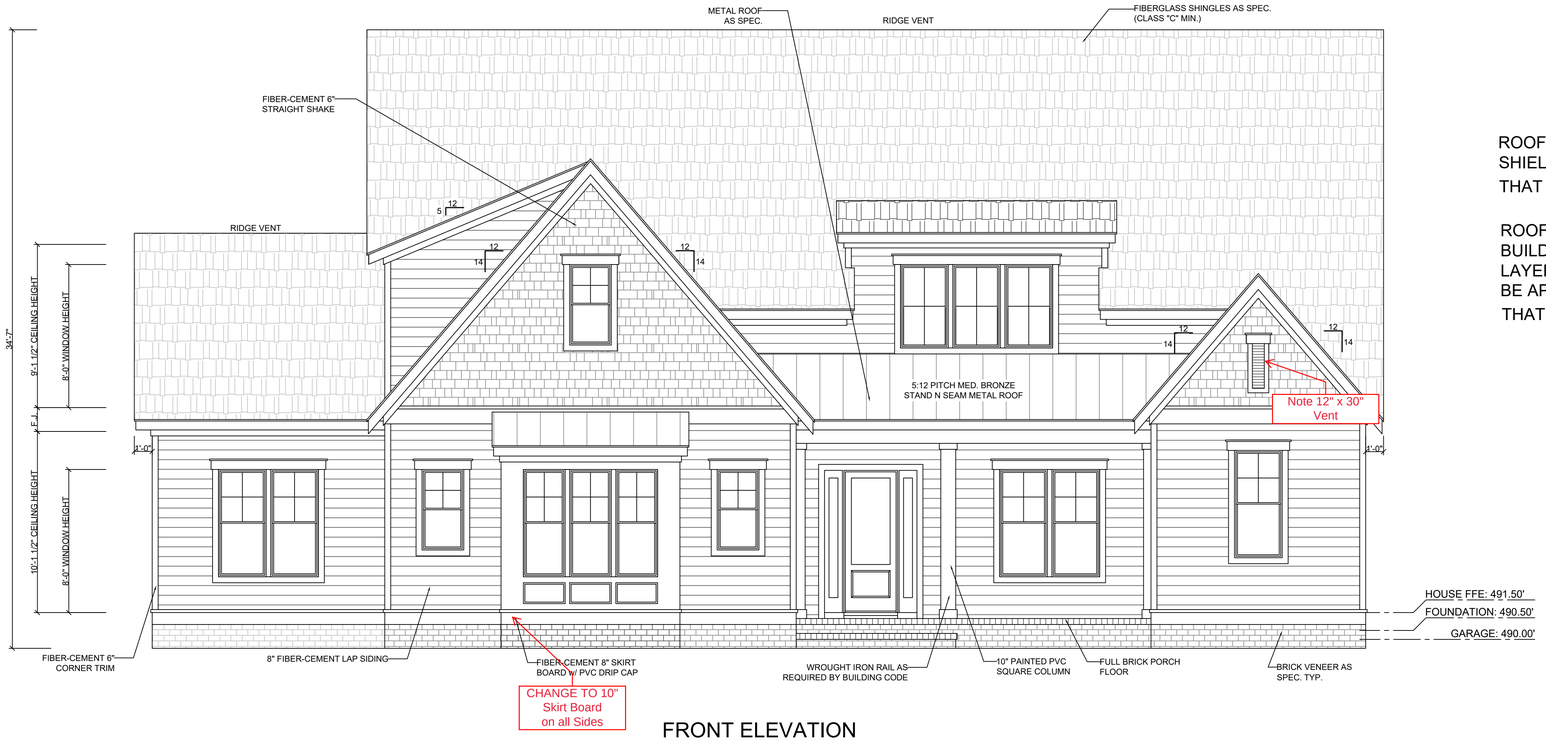

FRONT ELEVATION

SCALE = $\frac{1}{4}$" = 1'-0"

ROOFING NOTE: ADD SNOW AND ICE SHIELD BENEATH ROOF PITCHES THAT ARE LESS THAN $\frac{4}{12}$

ROOFING NOTE PER 2018 NC BUILDING CODE R905.2: TWO LAYERS OF UNDERLAYMENT MUST BE APPLIED TO ROOF PITCHES THAT ARE LESS THAN $\frac{4}{12}$

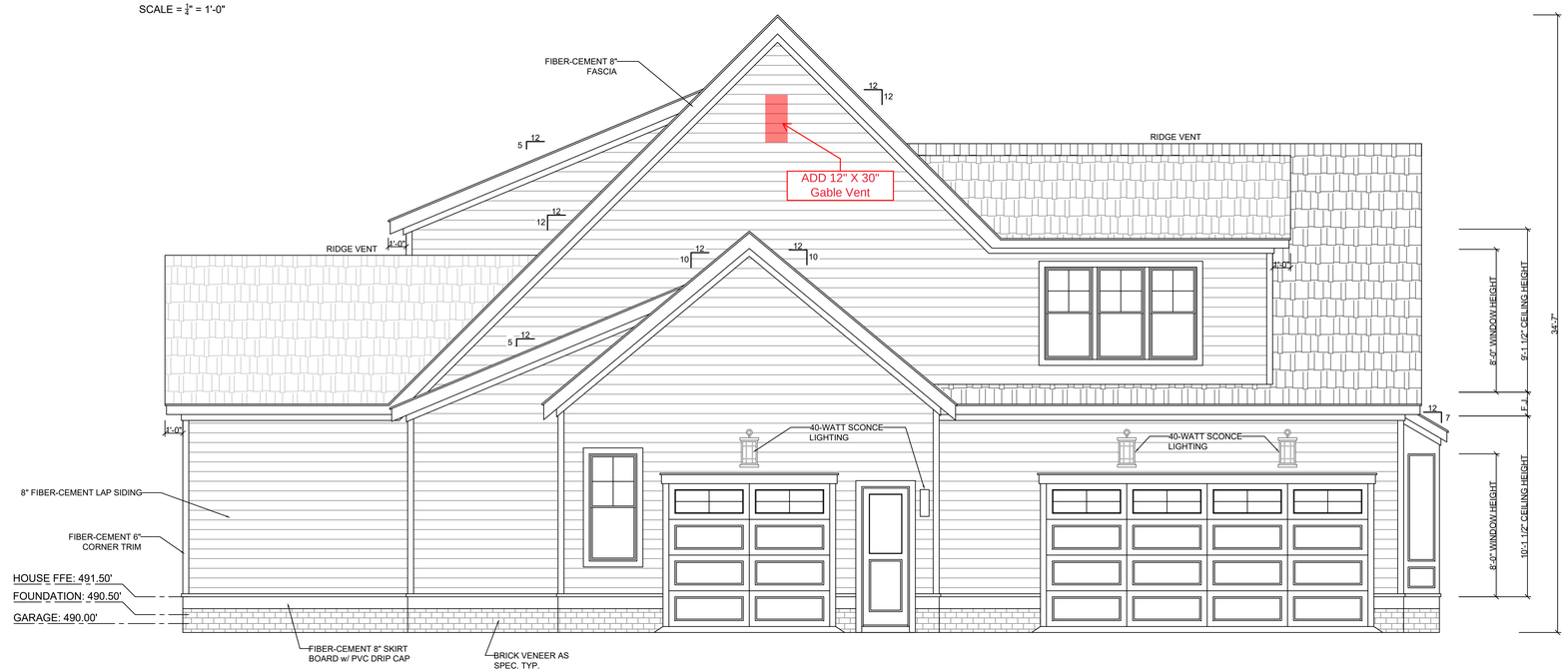

LEFT ELEVATION

SCALE = $\frac{1}{4}$" = 1'-0"

BOX SCORE CHART

PROJECT INFORMATION:

ADDRESS:	41 GLASGOW DRIVE, PINEHURST, NC 28374
LOT NUMBER:	2423
BUILDER:	HOMES BY DICKERSON
OWNER/CLIENT:	SPEC / N/A
ZONING DISTRICT:	R-15 RESIDENTIAL
OCCUPANCY:	R-3 (ONE & TWO FAMILY DWELLING)
CONSTRUCTION TYPE:	V-B

BUILDING AREAS:

1ST FLOOR HEATED:	2,233 SF
2ND FLOOR HEATED:	1,642 SF
TOTAL HEATED:	3,875 SF
GARAGE:	858 SF
COVERED PORCH:	158 SF
SCREEN PORCH:	250 SF
TOTAL UNDER ROOF:	5,141 SF

SITE DATA:

LOT SIZE:	30,043 SF
FRONT SETBACK:	40 FT
SIDE SETBACKS:	30 FT / 30 FT
REAR SETBACK:	60 FT
BUILDING HEIGHT:	34' FT
LOT COVERAGE ALLOWED:	24%
LOT COVERAGE PROVIDED:	20.05%

ADDITIONAL INFO:

BEDS:	4
BATHROOMS:	3 (2 PWDR)
ROOF PITCH:	12:12 MAIN
EXTERIOR:	BRICK & FIBER CEMENT SIDING

HOMES BY DICKERSON
2841 PLAZA PLACE, SUITE 210
RALEIGH, NC 27612
919.847.4447

ORIGINAL CONCEPT BY
JEFF WILLIAMS
REGISTERED ARCHITECT
2841 PLAZA PL, SUITE 210
RALEIGH, NC 27612 919.847.4447
BUILDER LICENSE # : 9645

LOT 2423 - PINEWILD

THE BRIGHTON
ENGLISH COTTAGE

DRAWN BY **NC**
6/13/2025

REVISION DATE
8/4/2025

SHEET NO.

1

ELEVATIONS

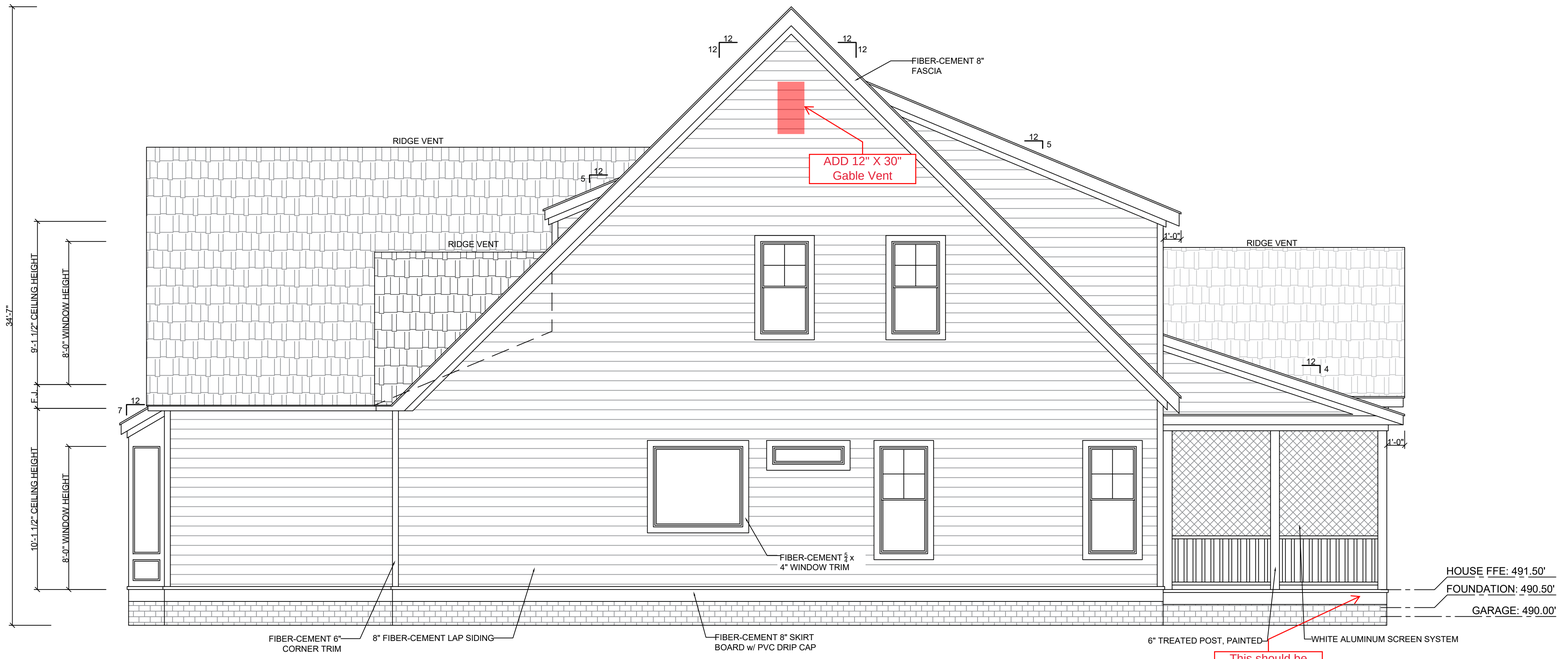

RIGHT ELEVATION

SCALE = 1/4" = 1'-0"

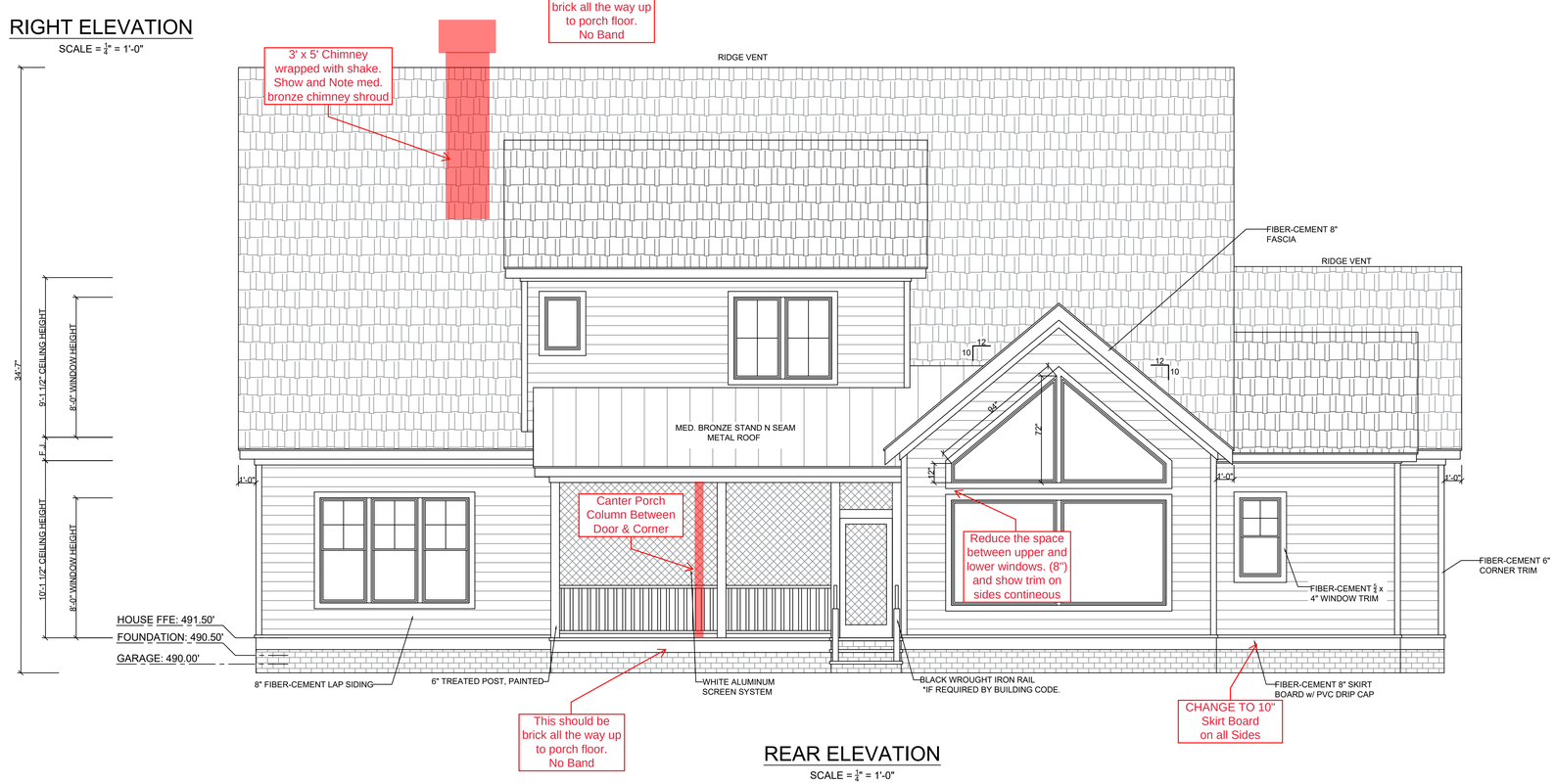

REAR ELEVATION

SCALE = 1/4" = 1'-0"

BOX SCORE CHART

PROJECT INFORMATION:

ADDRESS:	41 GLASGOW DRIVE, PINEHURST, NC 28374
LOT NUMBER:	2423
BUILDER:	HOMES BY DICKERSON
OWNER/CLIENT:	SPEC / N/A
ZONING DISTRICT:	R-15 RESIDENTIAL
OCCUPANCY:	R-3 (ONE & TWO FAMILY DWELLING)
CONSTRUCTION TYPE:	V-B

BUILDING AREAS:

1ST FLOOR HEATED:	2,233 SF
2ND FLOOR HEATED:	1,642 SF
TOTAL HEATED:	3,875 SF
GARAGE:	858 SF
COVERED PORCH:	158 SF
SCREEN PORCH:	250 SF
TOTAL UNDER ROOF:	5,141 SF

SITE DATA:

LOT SIZE:	30,043 SF
FRONT SETBACK:	40 FT
SIDE SETBACKS:	30 FT / 30 FT
REAR SETBACK:	60 FT
BUILDING HEIGHT:	34' FT
LOT COVERAGE ALLOWED:	24%
LOT COVERAGE PROVIDED:	20.05%

ADDITIONAL INFO:

BEDS:	4
BATHROOMS:	3 (2 PWDR)
ROOF PITCH:	12:12 MAIN
EXTERIOR:	BRICK & FIBER CEMENT SIDING

HOMES BY DICKERSON
2841 PLAZA PLACE, SUITE 210
RALEIGH, NC 27612
919.847.4447

ORIGINAL CONCEPT BY
JEFF WILLIAMS
REGISTERED ARCHITECT
2841 PLAZA PL, SUITE 210
RALEIGH, NC 27612 919.847.4447
BUILDER LICENSE # : 9645

LOT 2423 - PINEWILD

THE BRIGHTON ENGLISH COTTAGE

DRAWN BY **NC**
6/13/2025

REVISION DATE
8/4/2025

SHEET NO.

2

ELEVATIONS

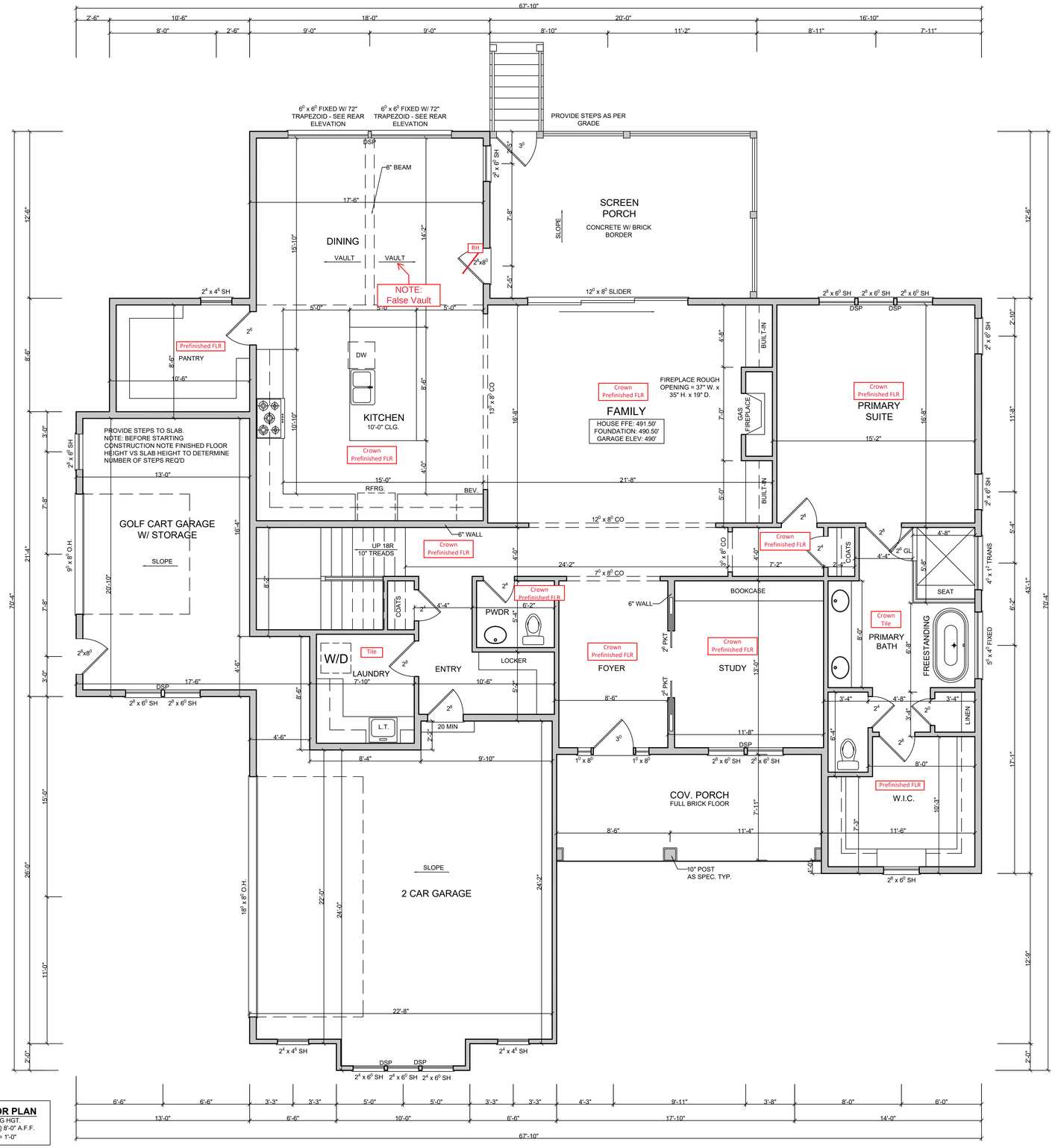

FIRST FLOOR PLAN
10'-0" CEILING HGT.
SET WINDOWS @ 8'-0" A.F.F.
SCALE= $\frac{1}{4}$" = 1'-0"

BOX SCORE CHART

PROJECT INFORMATION:

ADDRESS:	41 GLASGOW DRIVE, PINEHURST, NC 28374
LOT NUMBER:	2423
BUILDER:	HOMES BY DICKERSON
OWNER/CLIENT:	SPEC / N/A
ZONING DISTRICT:	R-15 RESIDENTIAL
OCCUPANCY:	R-3 (ONE & TWO FAMILY DWELLING)
CONSTRUCTION TYPE:	V-B

BUILDING AREAS:

1ST FLOOR HEATED:	2,233 SF
2ND FLOOR HEATED:	1,642 SF
TOTAL HEATED:	3,875 SF
GARAGE:	858 SF
COVERED PORCH:	158 SF
SCREEN PORCH:	250 SF
TOTAL UNDER ROOF:	5,141 SF

SITE DATA:

LOT SIZE:	30,043 SF
FRONT SETBACK:	40 FT
SIDE SETBACKS:	30 FT / 30 FT
REAR SETBACK:	60 FT
BUILDING HEIGHT:	34' FT
LOT COVERAGE ALLOWED:	24%
LOT COVERAGE PROVIDED:	20.05%

ADDITIONAL INFO:

BEDS:	4
BATHROOMS:	3 (2 PWDR)
ROOF PITCH:	12:12 MAIN
EXTERIOR:	BRICK & FIBER CEMENT SIDING

AREA CALCULATIONS

HEATED (SQ.FT.)		UNHEATED (SQ.FT.)	
BASEMENT	N/A	GARAGE	858
1ST FLOOR	2233	PORCH	158
SECOND FLOOR	1642	SCREEN	250
TOTAL	3875	TOTAL	1266
		UNFINISHED STOR.	200

NOTES

- PLANS DESIGNED UNDER 2018 NORTH CAROLINA RESIDENTIAL CODE.
- ALL ANGLED WALLS ARE 45° UNLESS NOTED OTHERWISE.
- FINISH DOOR AND WINDOW HEADS SHALL ALIGN EXCEPT AS NOTED.
- ALL MATERIALS AND COMPONENTS MUST BE INSTALLED PER MANUFACTURERS RECOMMENDATIONS.
- GRADES SHOWN ARE ILLUSTRATIVE, NATURAL GRADE WILL DETERMINE FINISH GRADE.
- FLOOR PLAN NOTATIONS GOVERN OVER ELEVATION SCALE.
- VERIFY ALL WINDOW SIZES, RADIUS AND DETAILS WITH CHOSEN MANUFACTURER.
- ALL HABITABLE ROOMS SHALL MEET LIGHT/VENTILATION & EGRESS REQUIREMENTS.
- TEMPERED GLASS TO BE USED AT ALL SAFETY REQUIRED LOCATIONS.
- ALL WINDOW GLAZING TO HAVE 0.35 U-FACTOR MIN.
- ALL CABINET DESIGNS/LAYOUTS TO BE VERIFIED WITH SHOP DRAWINGS FROM CABINET MANUFACTURER.
- PER 2018 N.C. RESIDENTIAL BUILDING CODE TABLE R302.6: SHEETROCK ON GARAGE CEILING TO BE $\frac{5}{8}$" TYPE "X".

HOMES BY DICKERSON
2841 PLAZA PLACE, SUITE 210
RALEIGH, NC 27612
919.847.4447

ORIGINAL CONCEPT BY
JEFF WILLIAMS
REGISTERED ARCHITECT
2841 PLAZA PL, SUITE 210
RALEIGH, NC 27612 919.847.4447
BUILDER LICENSE # : 9645

LOT 2423 - PINEWILD

THE BRIGHTON
ENGLISH COTTAGE

DRAWN BY **NC**
6/13/2025

REVISION DATE
8/4/2025

SHEET NO.
3

FLOOR PLAN

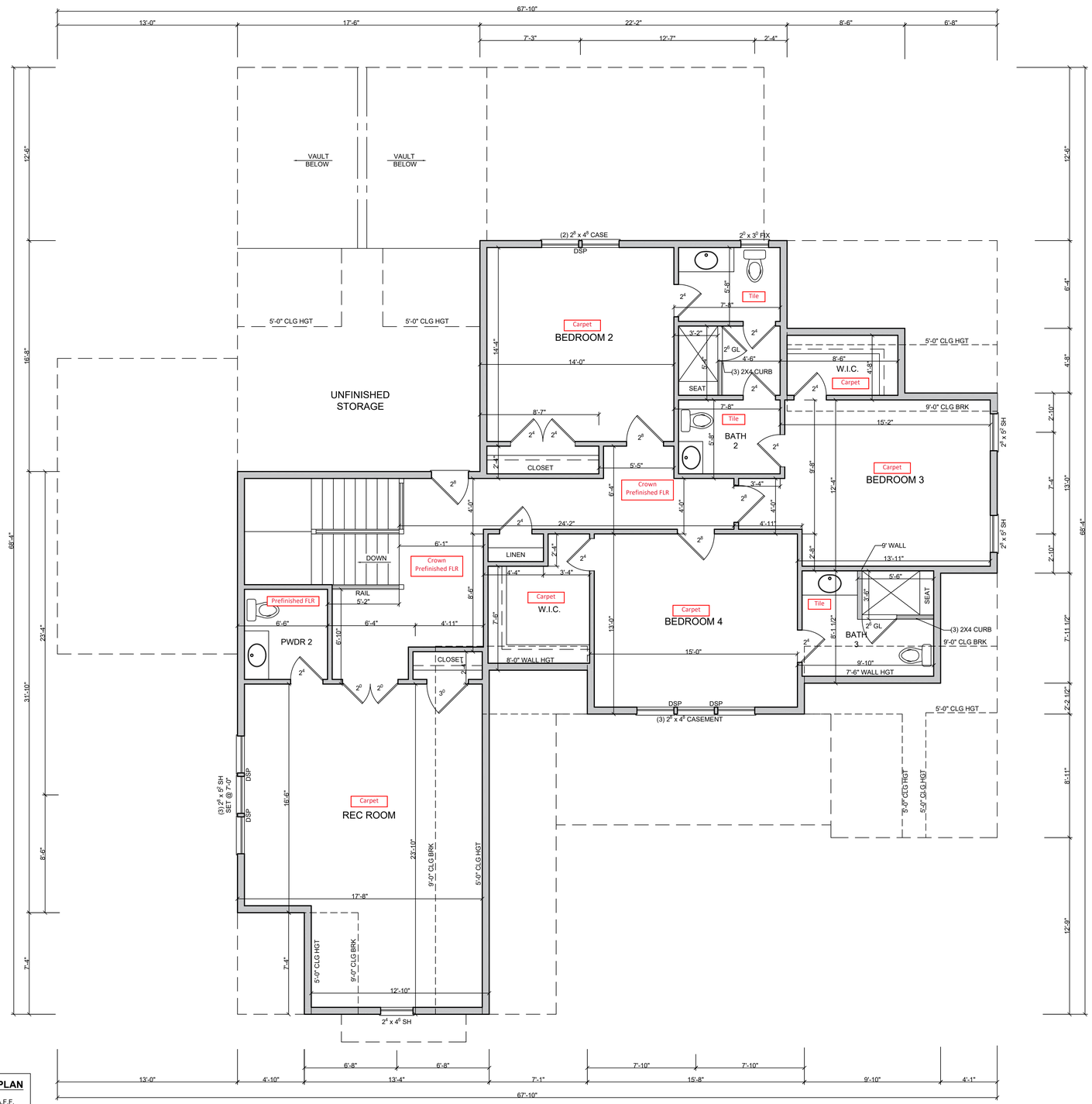

SECOND FLOOR PLAN
9'-0" CEILING HGT.
SET WINDOWS @ 8'-0" A.F.F.
SCALE= 1/4" = 1'-0"

BOX SCORE CHART

PROJECT INFORMATION:

ADDRESS:	41 GLASGOW DRIVE, PINEHURST, NC 28374
LOT NUMBER:	2423
BUILDER:	HOMES BY DICKERSON
OWNER/CLIENT:	SPEC / N/A
ZONING DISTRICT:	R-15 RESIDENTIAL
OCCUPANCY:	R-3 (ONE & TWO FAMILY DWELLING)
CONSTRUCTION TYPE:	V-B

BUILDING AREAS:

1ST FLOOR HEATED:	2,233 SF
2ND FLOOR HEATED:	1,642 SF
TOTAL HEATED:	3,875 SF
GARAGE:	858 SF
COVERED PORCH:	158 SF
SCREEN PORCH:	250 SF
TOTAL UNDER ROOF:	5,141 SF

ADDITIONAL INFO:

BEDS:	4
BATHROOMS:	3 (2 PWDR)
ROOF PITCH:	12:12 MAIN
EXTERIOR:	BRICK & FIBER CEMENT SIDING

SITE DATA:

LOT SIZE:	30,043 SF
FRONT SETBACK:	40 FT
SIDE SETBACKS:	30 FT / 30 FT
REAR SETBACK:	60 FT
BUILDING HEIGHT:	34' FT
LOT COVERAGE ALLOWED:	24%
LOT COVERAGE PROVIDED:	20.05%

HOMES BY DICKERSON
2841 PLAZA PLACE, SUITE 210
RALEIGH, NC 27612
919.847.4447

ORIGINAL CONCEPT BY
JEFF WILLIAMS
REGISTERED ARCHITECT
2841 PLAZA PL, SUITE 210
RALEIGH, NC 27612 919.847.4447
BUILDER LICENSE # : 9645

LOT 2423 - PINEWILD
THE BRIGHTON
ENGLISH COTTAGE

DRAWN BY **NC**
6/13/2025
REVISION DATE
8/4/2025

SHEET NO.
4

FLOOR PLAN

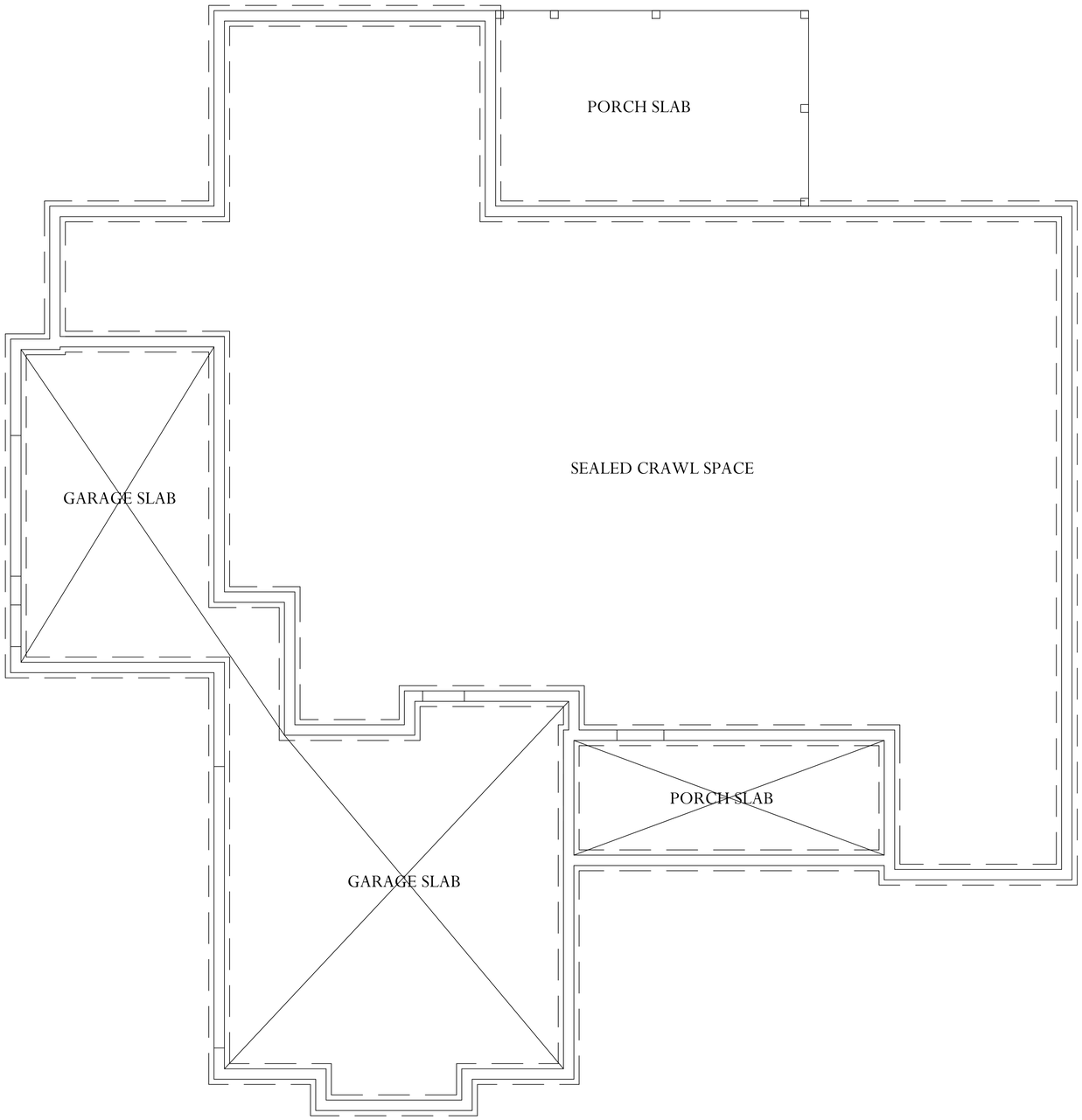

FOUNDATION PLAN

SCALE= $\frac{1}{4}$" = 1'-0"

FOUNDATION VENT CALCS.

$\frac{3008 \text{ SQ. FT}}{150}$ = 20.0 SQ.FT. VENT REQ'D.

$\frac{20.0 \text{ SQ.FT.}}{.56}$ = 36 VENTS TO BE PROVIDED

NOTE: FIGURE BASED ON SECTION R-409 OF THE 2018 IRC.
NOTE: FND VENT SPECS BASED ON PUSH/PULL POLYPROPYLENE FND.
VENT THAT ALLOWS 72 SQ.IN. OF NET FREE AREA PER VENT

1. WHERE CONTINUOUS OPERATED MECHANICAL VENTILATION IS PROVIDED AT A RATE OF 1.0 CFM FOR EACH 50 SQ.FT. OF CRAWL SPACE.
2. THE CRAWL SPACE IS SUPPLIED WITH CONDITIONED AIR AND THE PERIMETER WALLS ARE INSULATED IN ACCORDANCE WITH SECTION R409 OF THE 2018 IRC.
3. BUILDER/OWNER TO VERIFY VENT SIZE AND REQUIREMENTS PRIOR TO CONSTRUCTION. SEE SECTION R409 OF THE 2018 IRC.

BOX SCORE CHART

PROJECT INFORMATION:

ADDRESS:	41 GLASGOW DRIVE, PINEHURST, NC 28374
LOT NUMBER:	2423
BUILDER:	HOMES BY DICKERSON
OWNER/CLIENT:	SPEC / N/A
ZONING DISTRICT:	R-15 RESIDENTIAL
OCCUPANCY:	R-3 (ONE & TWO FAMILY DWELLING)
CONSTRUCTION TYPE:	V-B

BUILDING AREAS:

1ST FLOOR HEATED:	2,233 SF
2ND FLOOR HEATED:	1,642 SF
TOTAL HEATED:	3,875 SF
GARAGE:	858 SF
COVERED PORCH:	158 SF
SCREEN PORCH:	250 SF
TOTAL UNDER ROOF:	5,141 SF

ADDITIONAL INFO:

BEDS:	4
BATHROOMS:	3 (2 PWDR)
ROOF PITCH:	12:12 MAIN
EXTERIOR:	BRICK & FIBER CEMENT SIDING

SITE DATA:

LOT SIZE:	30,043 SF
FRONT SETBACK:	40 FT
SIDE SETBACKS:	30 FT / 30 FT
REAR SETBACK:	60 FT
BUILDING HEIGHT:	34' FT
LOT COVERAGE ALLOWED:	24%
LOT COVERAGE PROVIDED:	20.05%

HOMES BY DICKERSON
2841 PLAZA PLACE, SUITE 210
RALEIGH, NC 27612
919.847.4447

ORIGINAL CONCEPT BY
JEFF WILLIAMS
REGISTERED ARCHITECT
2841 PLAZA PL, SUITE 210
RALEIGH, NC 27612 919.847.4447
BUILDER LICENSE # : 9645

LOT 2423 - PINEWILD

THE BRIGHTON
ENGLISH COTTAGE

DRAWN BY **NC**
6/13/2025

REVISION DATE
8/4/2025

SHEET NO.

5

STRUCTURAL

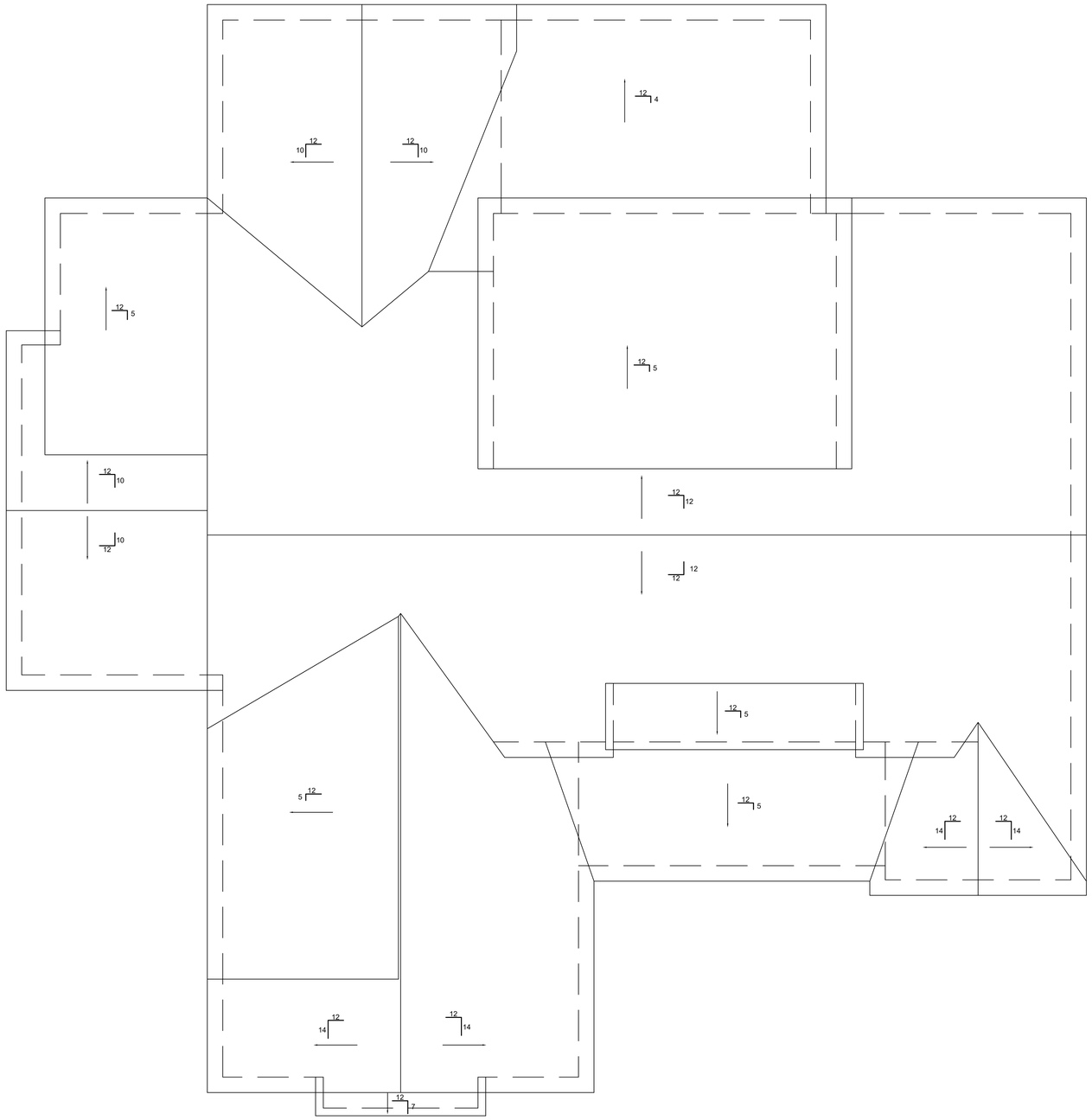

ROOF PLAN

SCALE= $\frac{1}{4}$" = 1'-0"

ROOF VENTILATING REQUIREMENTS

$\frac{3027}{150}$ SQ.FT. = 20.1 SQ.FT OF TOTAL ROOF VENTILATION REQ'D

130'-6" (LINEAR FT. OF SOFFIT) X .035 (NET FREE AREA PER FT.) = 4.6 SQ. FT. OF AVAILABLE SOFFIT VENT

129'-8" (LINEAR FT. OF RIDGE VENT) x .125 = 16.2

4.6 + 16.2 = 20.8, WHICH MUST BE > OR = 20.1

NOTE: FIGURE BASED ON SECTION R-806 OF THE 2018 IRC.
NOTE: - SOFFIT VENT SPECS BASED ON HARDISOFFIT PANELS THAT ALLOWS 5 SQ. IN. OF NET FREE AREA PER LINEAR FT.

- RIDGE VENT SPEC BASED ON VENTURIVENT PLES THAT ALLOWS 18 SQ. IN. OF NET FREE AREA PER LINEAR FT

TOTAL NET FREE VENTILATING AREA IS PERMITTED TO BE REDUCED TO 1 TO 300:

1. PROVIDED AT LEAST 50% AND NOT MORE THAN 80% OF THE REQ'D VENTILATING AREA IS PROVIDED BY VENTILATORS. REFERENCE R806.2 OF THE 2018 IRC. FOR PROPER LOCATION.
2. WHEN AN APPROVED VAPOR BARRIER HAVING A TRANSMISSION RATE NOT EXCEDING 1 PERM IS INSTALLED ON THE WARM SIDE OF THE CEILING

BOX SCORE CHART

PROJECT INFORMATION:

ADDRESS:	41 GLASGOW DRIVE, PINEHURST, NC 28374
LOT NUMBER:	2423
BUILDER:	HOMES BY DICKERSON
OWNER/CLIENT:	SPEC / N/A
ZONING DISTRICT:	R-15 RESIDENTIAL
OCCUPANCY:	R-3 (ONE & TWO FAMILY DWELLING)
CONSTRUCTION TYPE:	V-B

BUILDING AREAS:

1ST FLOOR HEATED:	2,233 SF
2ND FLOOR HEATED:	1,642 SF
TOTAL HEATED:	3,875 SF
GARAGE:	858 SF
COVERED PORCH:	158 SF
SCREEN PORCH:	250 SF
TOTAL UNDER ROOF:	5,141 SF

ADDITIONAL INFO:

BEDS:	4
BATHROOMS:	3 (2 PWDR)
ROOF PITCH:	12:12 MAIN
EXTERIOR:	BRICK & FIBER CEMENT SIDING

SITE DATA:

LOT SIZE:	30,043 SF
FRONT SETBACK:	40 FT
SIDE SETBACKS:	30 FT / 30 FT
REAR SETBACK:	60 FT
BUILDING HEIGHT:	34' FT
LOT COVERAGE ALLOWED:	24%
LOT COVERAGE PROVIDED:	20.05%

HOMES BY DICKERSON
2841 PLAZA PLACE, SUITE 210
RALEIGH, NC 27612
919.847.4447

ORIGINAL CONCEPT BY
JEFF WILLIAMS
REGISTERED ARCHITECT
2841 PLAZA PL, SUITE 210
RALEIGH, NC 27612 919.847.4447
BUILDER LICENSE # : 9645

LOT 2423 - PINEWILD

THE BRIGHTON
ENGLISH COTTAGE

DRAWN BY **NC**
6/13/2025

REVISION DATE
8/4/2025

SHEET NO.

6

STRUCTURAL

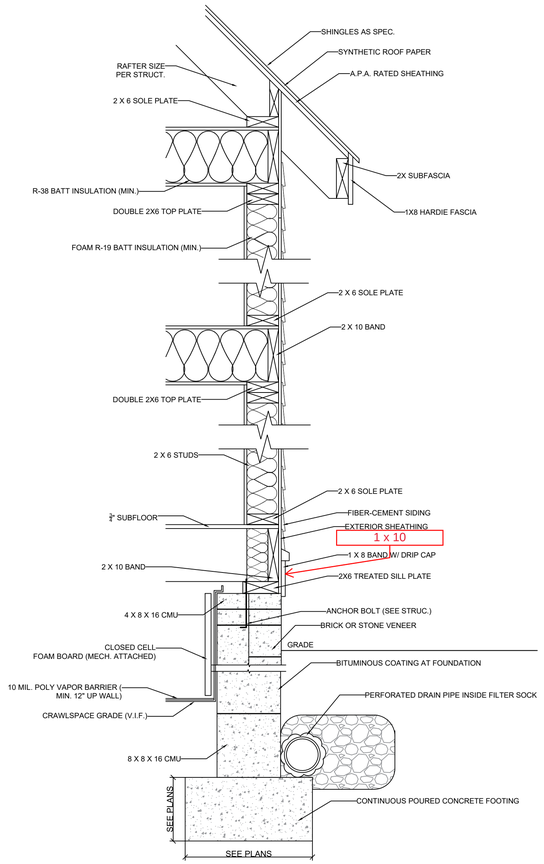

1 2-STORY WALL W/ SIDING
SCALE: 1" = 1'-0"

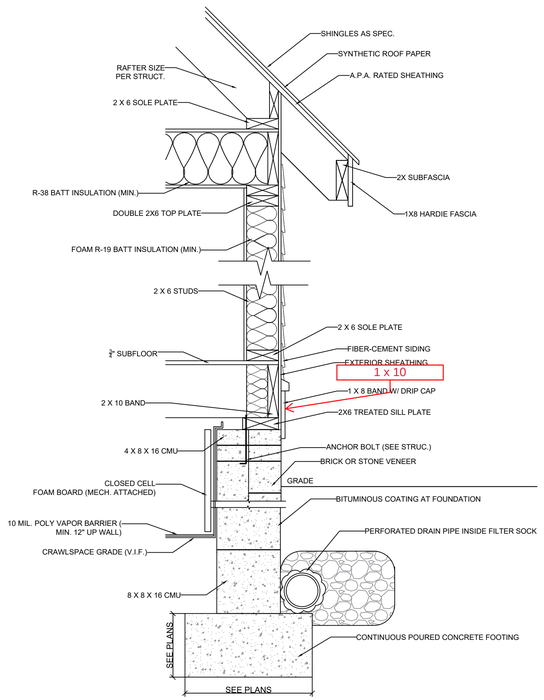

2 1-STORY WALL W/ SIDING
SCALE: 1" = 1'-0"

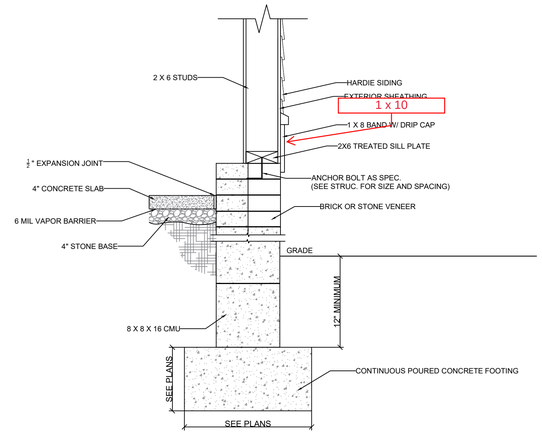

3 GARAGE WALL W/ SIDING
DESIGNED FOR 115MPH WINDS

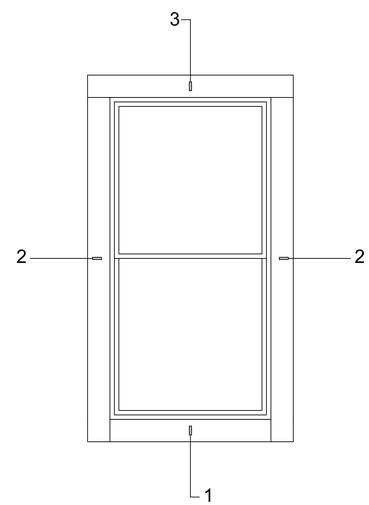

7 WINDOW TAPE DETAIL
NO SCALE

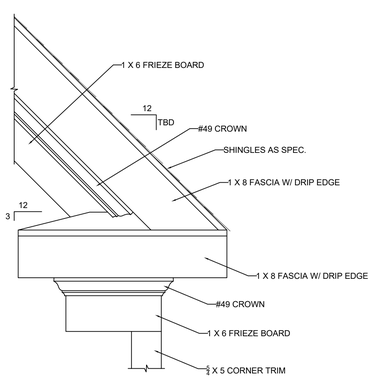

4 CORNICE RETURN DETAIL
SCALE: 1" = 1'-0"

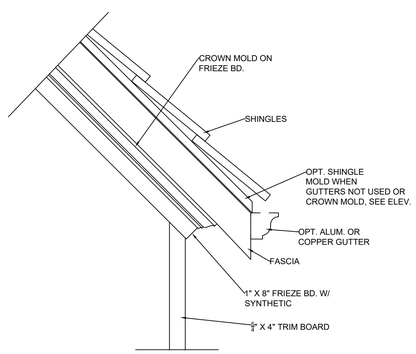

5 OPEN EAVE RETURN DETAIL
SCALE: 1" = 1'-0"

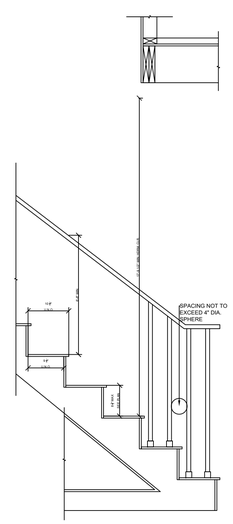

6 TYP. STAIR DETAIL @ 1" = 1'-0"

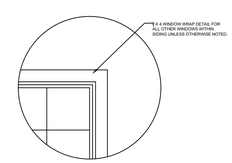

BOX SCORE CHART

PROJECT INFORMATION:

ADDRESS:	41 GLASGOW DRIVE, PINEHURST, NC 28374
LOT NUMBER:	2423
BUILDER:	HOMES BY DICKERSON
OWNER/CLIENT:	SPEC / N/A
ZONING DISTRICT:	R-15 RESIDENTIAL
OCCUPANCY:	R-3 (ONE & TWO FAMILY DWELLING)
CONSTRUCTION TYPE:	V-B

BUILDING AREAS:

1ST FLOOR HEATED:	2,233 SF
2ND FLOOR HEATED:	1,642 SF
TOTAL HEATED:	3,875 SF
GARAGE:	858 SF
COVERED PORCH:	158 SF
SCREEN PORCH:	250 SF
TOTAL UNDER ROOF:	5,141 SF

ADDITIONAL INFO:

BEDS:	4
BATHROOMS:	3 (2 PWDR)
ROOF PITCH:	12:12 MAIN
EXTERIOR:	BRICK & FIBER CEMENT SIDING

SITE DATA:

LOT SIZE:	30,043 SF
FRONT SETBACK:	40 FT
SIDE SETBACKS:	30 FT / 30 FT
REAR SETBACK:	60 FT
BUILDING HEIGHT:	34' FT
LOT COVERAGE ALLOWED:	24%
LOT COVERAGE PROVIDED:	20.05%

MEAN ROOF	UP TO 30'	30'-1" - 35'	35'-1" - 40'	40'-1" - 45'
ZONE 1	16.5, -18.0	17.3, -18.9	18.0, -19.6	18.5, -20.2
ZONE 2	16.5, -21.0	17.3, -22.1	18.0, -22.9	18.5, -23.5
ZONE 3	16.5, -21.0	17.3, -22.1	18.0, -22.9	18.5, -23.5
ZONE 4	18.0, -19.5	18.9, -20.5	19.6, -21.3	20.2, -21.8
ZONE 5	18.0, -24.1	18.9, -25.3	19.6, -26.3	20.2, -27.0

PLANS DESIGNED TO THE 2018 NORTH CAROLINA RESIDENTIAL CODE
HOUSE DESIGNED FOR ~~115 MPH 3 SECOND~~ GUST, EXPOSURE B
ANCHOR BOLTS TO BE NO MORE THAN 6' O.C. AND WITHIN 12" OF ALL PLATES SPLICES
ANCHOR BOLTS SHALL BE MIN. 1/2" DIAMETER & SHALL EXTEND A MINIMUM 7" INTO MASONRY OR CONCRETE

MEAN ROOF HEIGHT = <30'-0"

COMPONENT& CLADDING DESIGNED FOR THE FOLLOWING LOADS

HOMES BY DICKERSON
2841 PLAZA PLACE, SUITE 210
RALEIGH, NC 27612
919.847.4447

ORIGINAL CONCEPT BY
JEFF WILLIAMS
REGISTERED ARCHITECT
2841 PLAZA PL, SUITE 210
RALEIGH, NC 27612 919.847.4447
BUILDER LICENSE # : 9645

LOT 2423 - PINEWILD

THE BRIGHTON
ENGLISH COTTAGE

DRAWN BY **NC**
6/13/2025

REVISION DATE
8/4/2025

SHEET NO.
5

DETAILS