GENERAL NOTES:

1. IT IS THE CONTRACTORS RESPONSIBILITY TO VERIFY THAT ALL DIMENSIONS, ROOF PITCHES, AND SQUARE FOOTAGE ARE CORRECT PRIOR TO CONSTRUCTION. K&A HOME DESIGNS, INC. IS NOT RESPONSIBLE FOR ANY DIMENSIONING, ROOF PITCH, OR SQUARE FOOTAGE ERRORS ONCE CONSTRUCTION BEGINS.
2. ALL WALLS SHOWN ON THE FLOOR PLANS ARE DRAWN AT 4" UNLESS NOTED OTHERWISE.
3. ALL ANGLED WALL SHOWN ON THE PLANS ARE 45 DEGREES UNLESS NOTED OTHERWISE.
4. STUD WALL DESIGN SHALL CONFORM TO ALL NORTH CAROLINA STATE BUILDING CODE REQUIREMENTS.
5. DO NOT SCALE PLANS. DRAWING SCALE MAY BE DISTORTED DUE TO COPIER IMPERFECTIONS.
6. ALL CONSTRUCTION SHALL BE IN ACCORDANCE WITH NORTH CAROLINA RESIDENTIAL STATE BUILDING CODE, 2018 EDITION.

SQUARE FOOTAGE

HEATED SQUARE FOOTAGE		UNHEATED SQUARE FOOTAGE	
FIRST FLOOR=	1086	GARAGE=	380
SECOND FLOOR=	1235	FRONT PORCH=	N/A
THIRD FLOOR=	N/A	SCREEN PORCH=	N/A
BASEMENT=	N/A	DECK=	N/A
		STORAGE=	N/A
TOTAL HEATED=	2321	TOTAL UNHEATED=	380

CRAWL SPACE VENTILATION CALCULATIONS

-VENT LOCATIONS MAY VARY FROM THOSE SHOWN ON THE PLAN BUT SHOULD BE PLACED TO PROVIDE ADEQUATE VENTILATION AT ALL POINTS TO PREVENT DEAD AIR POCKETS.

-100% VAPOR BARRIER MUST BE PROVIDED WITH 12" MIN. LAP JOINTS.

-THE TOTAL AREA OF VENTILATION OPENINGS MAY BE REDUCED TO 1/1500 AS LONG AS REQUIRED OPENINGS ARE PLACED SO AS TO PROVIDE CROSS-VENTILATION OF THE SPACE. THE INSTALLATION OF OPERABLE LOUVERS SHALL NOT BE PROHIBITED. (COMPLY WITH NC CODE MIN. WITH REGARD TO VENT PLACEMENT FROM CORNERS)

N/A SQ. FT. OF CRAWL SPACE/1500

N/A SQ. FT. OF REQUIRED VENTILATION

PROVIDED BY: N/A VENTS AT 0.45 SQ. FT. NET FREE

VENTILATION EACH= N/A SQ. FT. OF VENTILATION

*****FOUNDATION DRAINAGE- WATERPROOFING PER SECTIONS 405 & 406.***

ATTIC VENTILATION CALCULATIONS

- CALCULATIONS SHOWN BELOW ARE BASED ON VENTILATORS USED AT LEAST 3 FT. ABOVE THE CORNICE VENTS WITH THE BALANCE OF VENTIALTION PROVIDED BE EAVE VENTS.

- CATHEDRAL CEILINGS SHALL HAVE A MIN. 1" CLEARANCE BETWEEN THE BOTTOM OF THE ROOF DECK AND THE INSULATION.

1458 SQ. FT. OF ATTIC/300= 4.86

EACH OF INLET AND OUTLET REQUIRED.

****WALL AND ROOF CLADDING DESIGN VALUES***

- WALL CLADDING IS DESIGNED FOR A 24.1 SQ. FT. OR GREATER POSITIVE AND NEGATIVE PRESSURE.

- ROOF VALUES BOTH POSITVE AND NEGATIVE SHALL BE AS FOLLOWS:

45.5 LBS. PER SQ. FT. FOR ROOF PITCHES OF 0/12 TO 2.25/12

34.8 LBS. PER SQ. FT. FOR ROOF PITCHES OF 2.25/12 TO 7/12

21 LBS. PER SQ. FT. FOR ROOF PITCHES OF 7/12 TO 12/12

***** MEAN ROOF HEIGHT 30' OR LESS***

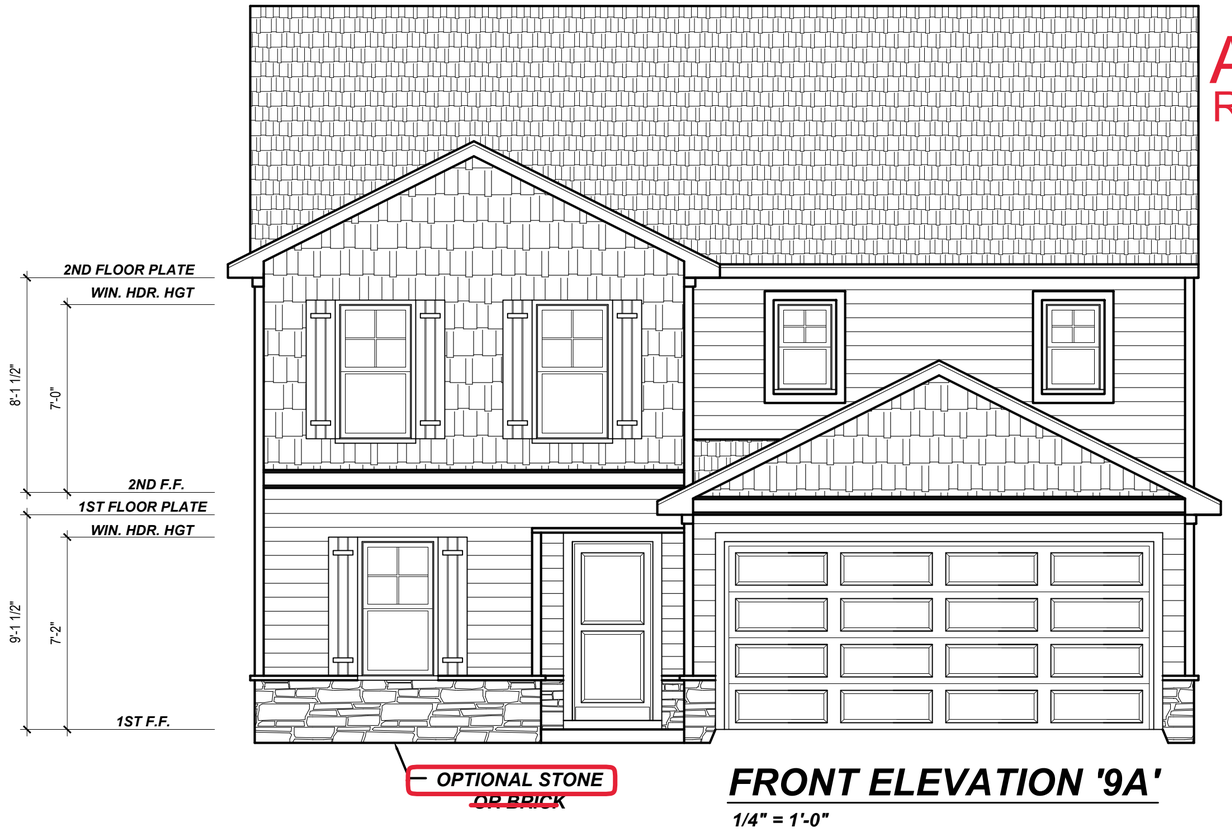

FRONT ELEVATION '9A'

1/4" = 1'-0"

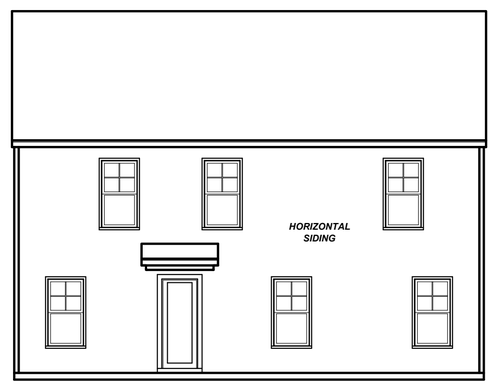

REAR ELEVATION

1/8" = 1'-0"

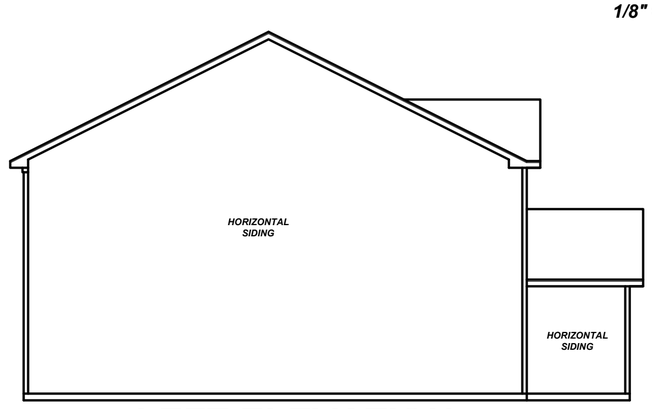

LEFT ELEVATION

1/8" = 1'-0"

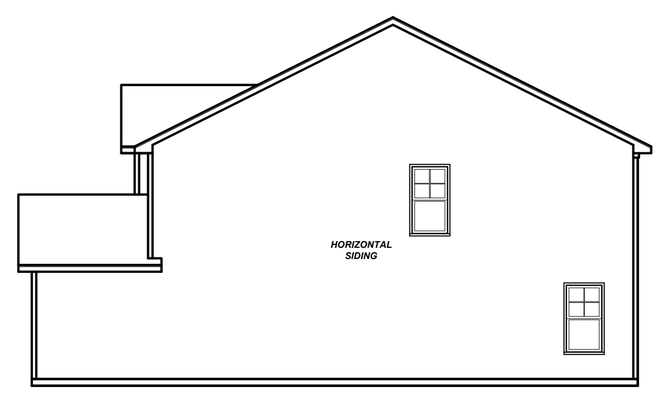

RIGHT ELEVATION

1/8" = 1'-0"

ASH-028
RH GARAGE

Project #: 23-074
Date: 3-27-23
Drawn/Design By: KBB
Scale: REFER TO ELEV.

REVISIONS

No.	Date:	Remarks
1		
2		
3		
4		

K&A HOME DESIGN Inc.
9101 Ten-Ten Rd.
Raleigh, NC 27603
Office: (919) 302-0693
Website: www.KandAHomeDesigns.com
Email: Kent@KandAHomeDesigns.com

WASHINGTON
GR

Ben Stout Construction
1786 Metro Medical Dr.
Fayetteville, NC 28304

ELEVATIONS

Sheet Number
1
of 6

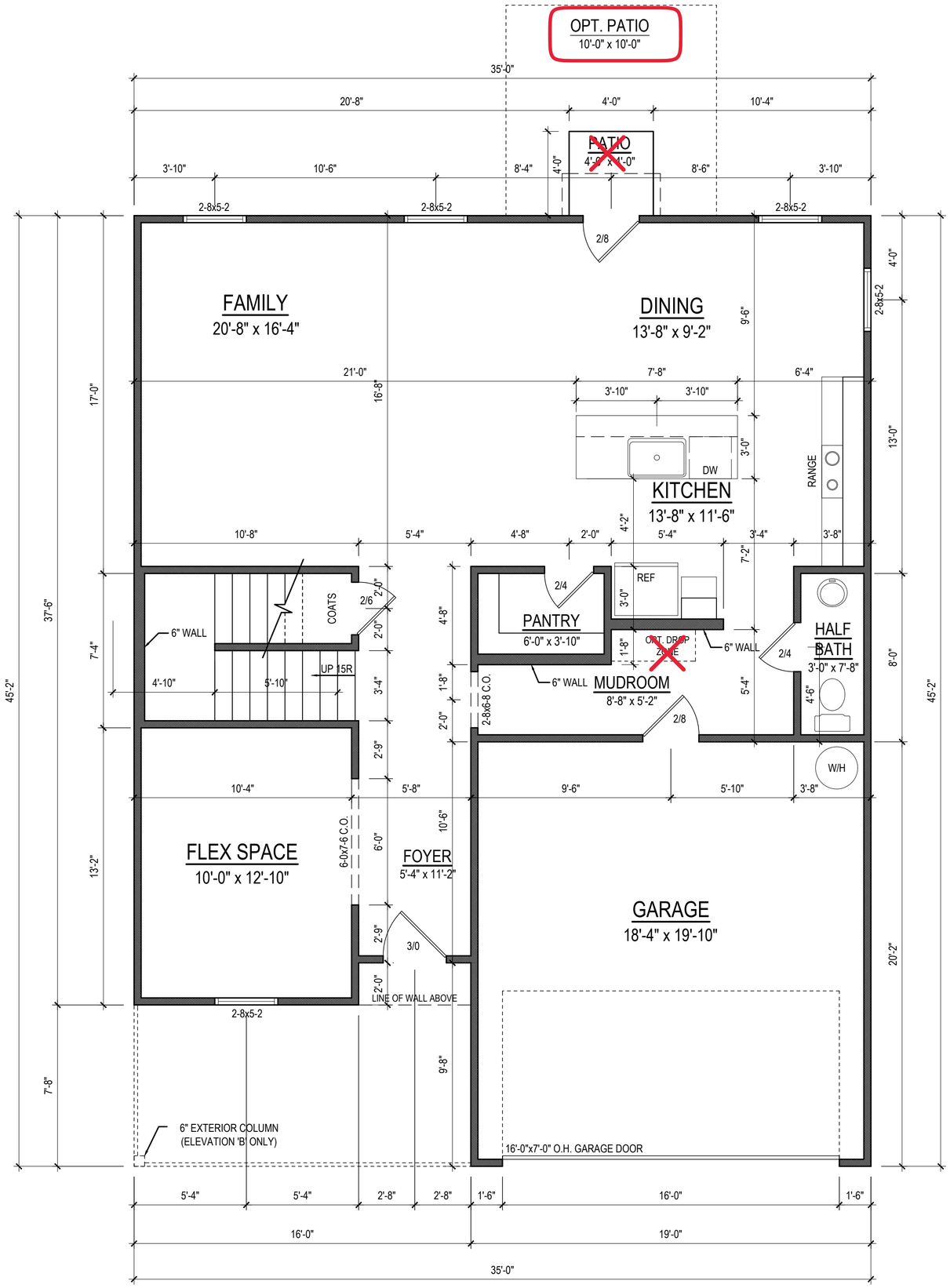

FIRST FLOOR PLAN

1/4" = 1'-0" *CEILING HT. = 9'-0"*

Project #:
23-074
Date:
3-27-23
Drawn/Design By:
KBB
Scale:
1/4"=1'-0"

REVISIONS

No.	Date:	Remarks
1		
2		
3		
4		

K&A HOME DESIGN Inc.
9101 Ten-Ten Rd.
Raleigh, NC 27603
Office: (919) 302-0693
Email: Kent@KandAHomeDesigns.com
Website: www.KandAHomeDesigns.com

WASHINGTON
GR

Ben Stout Construction
1786 Metro Medical Dr.
Fayetteville, NC 28304

FIRST FLOOR

Sheet Number
3
of 6

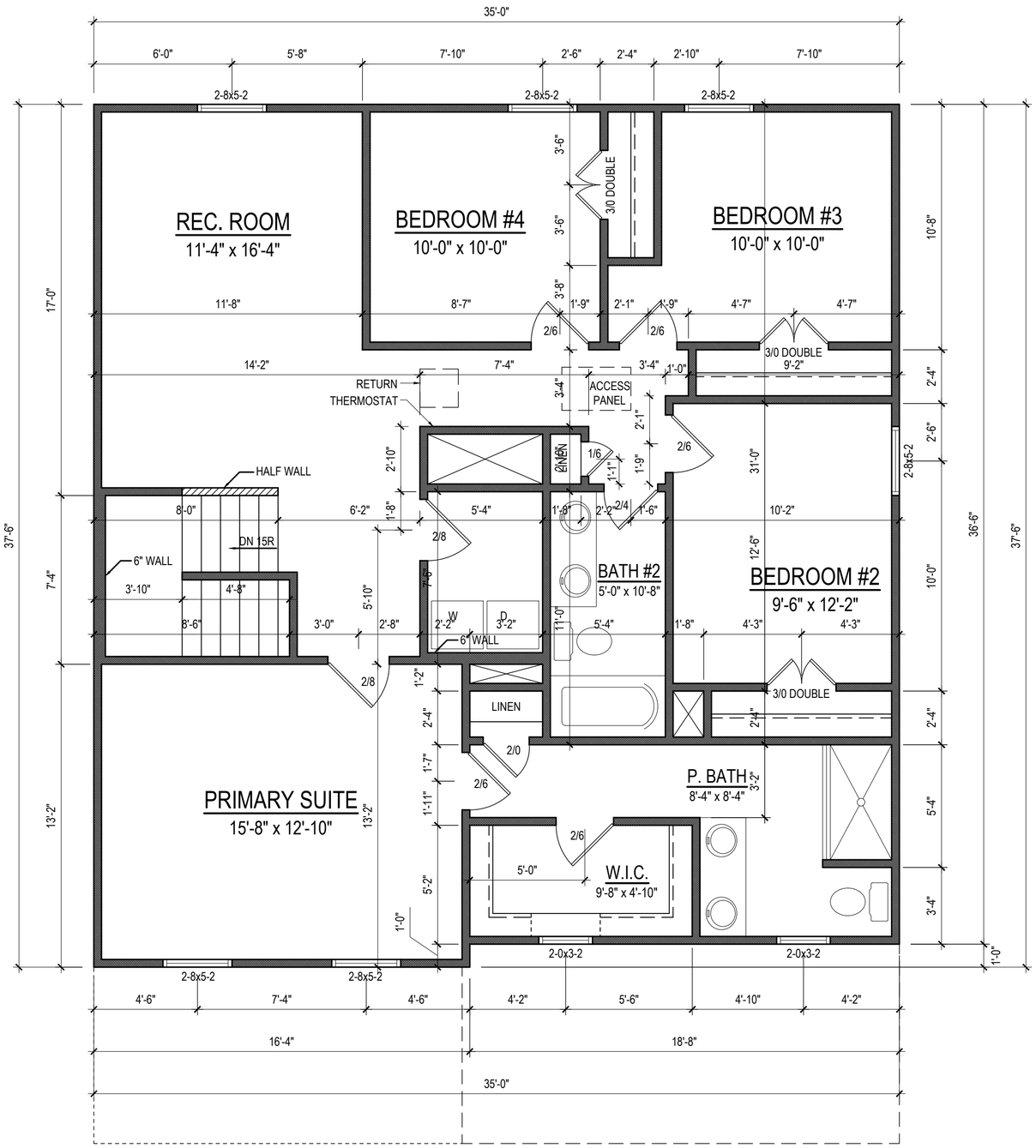

SECOND FLOOR PLAN

1/4" = 1'-0" *CEILING HT. = 8'-0"*

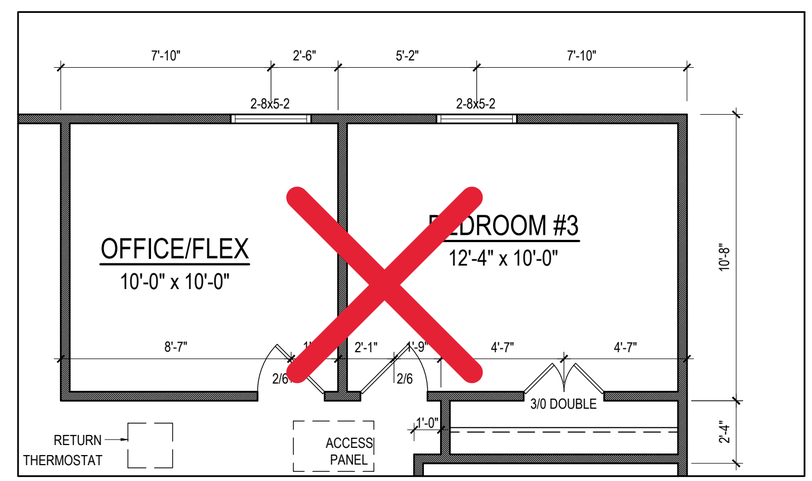

3 BEDROOM OPTION

1/4" = 1'-0" *CEILING HT. = 8'-0"*

Project #:	23-074
Date:	3-27-23
Drawn/Design By:	KBB
Scale:	1/4"=1'-0"

REVISIONS

No.	Date:	Remarks
1		
2		
3		
4		

9101 Ten-Ten Rd.
Raleigh, NC 27603
Office: (919) 302-0693

K&A HOME DESIGN Inc.

Website: www.KandAHomeDesigns.com
Email: Kent@KandAHomeDesigns.com

WASHINGTON
GR

Ben Stout Construction
1786 Metro Medical Dr.
Fayetteville, NC 28304

SECOND FLOOR

Sheet Number
4
of 6

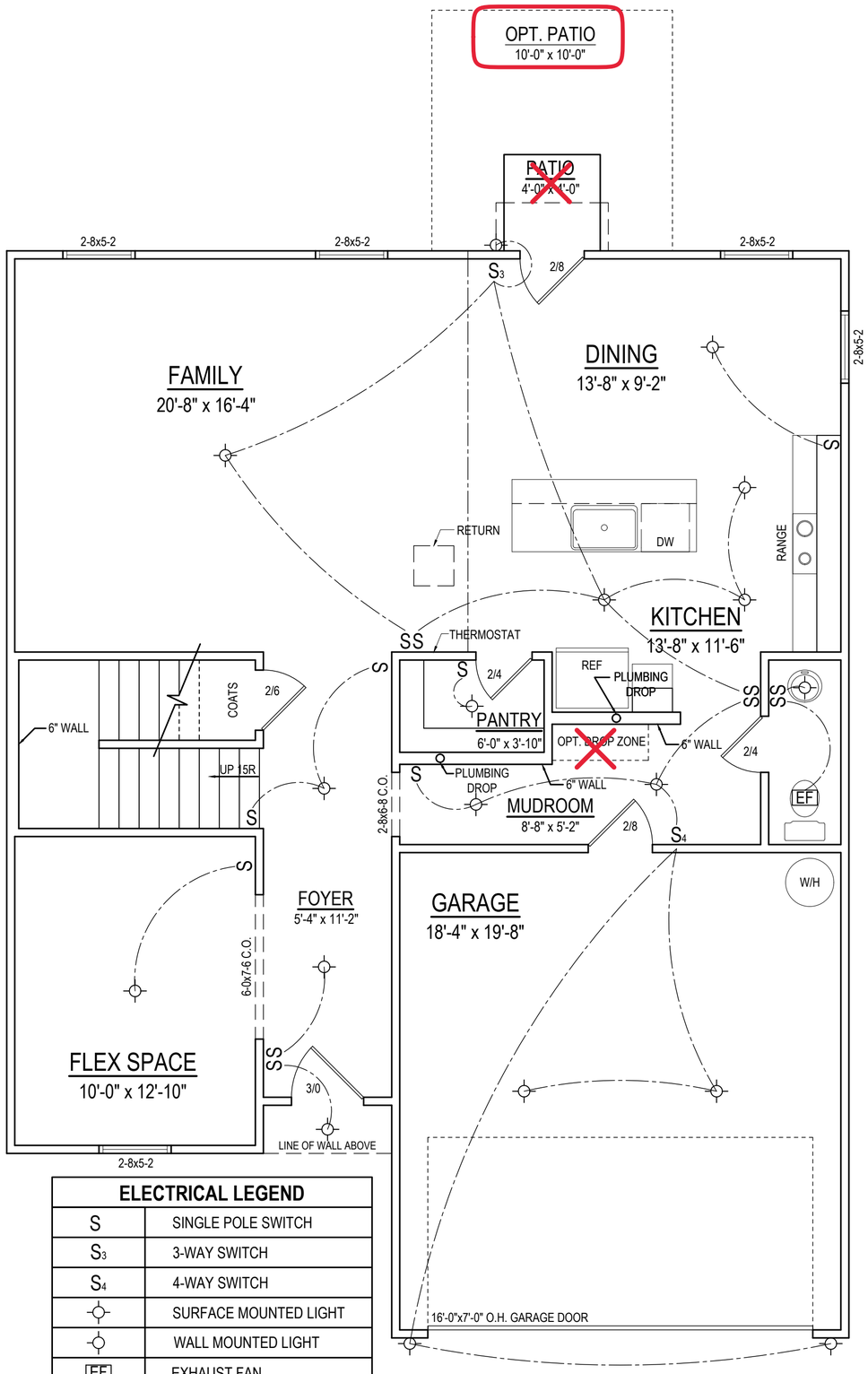

ELECTRICAL LEGEND	
S	SINGLE POLE SWITCH
S_3	3-WAY SWITCH
S_4	4-WAY SWITCH
	SURFACE MOUNTED LIGHT
	WALL MOUNTED LIGHT
EF	EXHAUST FAN

FIRST FLOOR PLAN

1/4" = 1'-0" *CEILING HT. = 9'-0"*

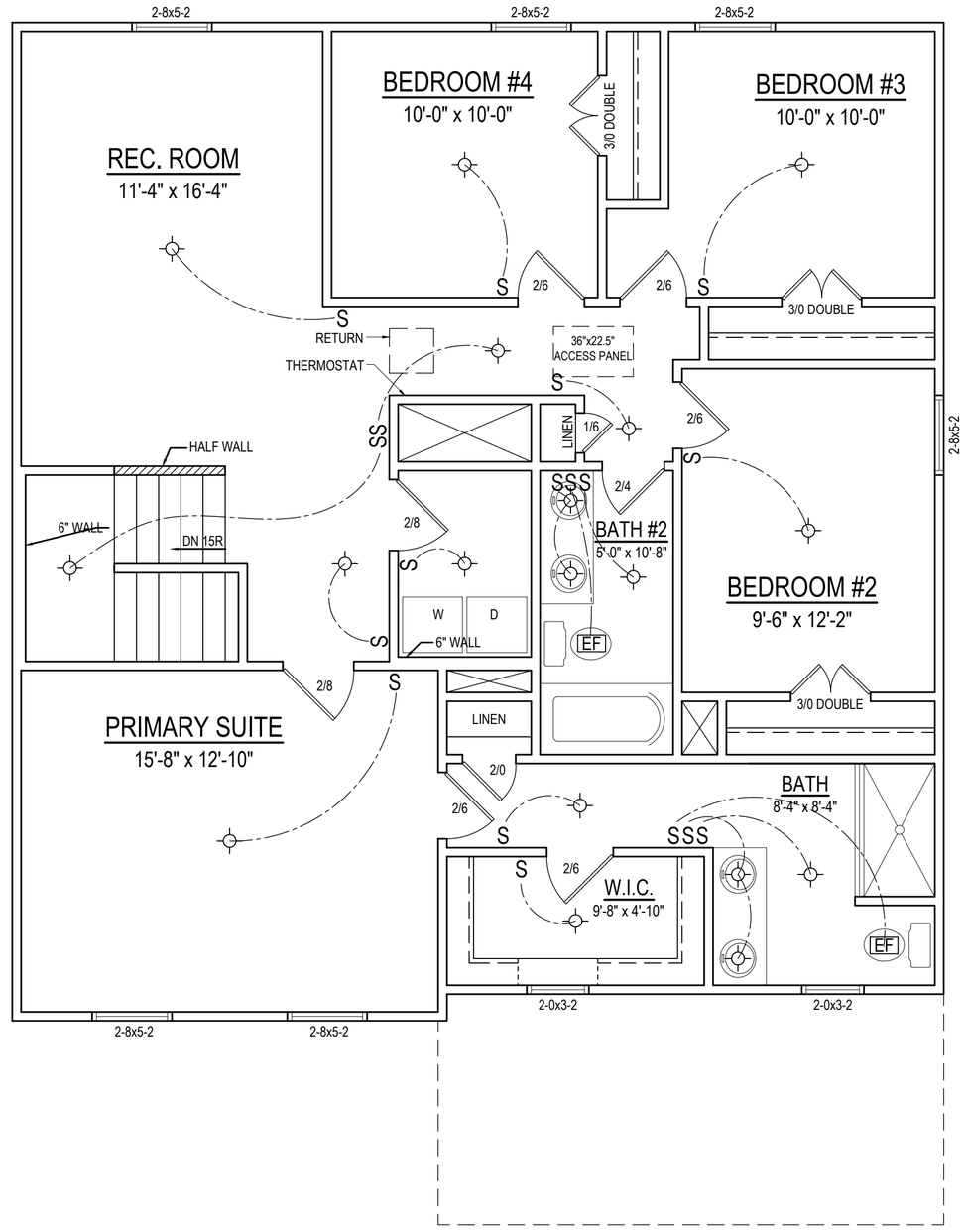

SECOND FLOOR PLAN

1/4" = 1'-0" *CEILING HT. = 8'-0"*

Project #:
23-074
Date:
3-27-23
Drawn/Design By:
KBB
Scale:
1/4"=1'-0"

REVISIONS

No.	Date:	Remarks
1		
2		
3		
4		

9101 Ten-Ten Rd.
Raleigh, NC 27603
Office: (919) 302-0693
K&A HOME DESIGN Inc.
Website: www.KandAHomeDesigns.com
Email: Kent@KandAHomeDesigns.com

WASHINGTON
GR

Ben Stout Construction
1786 Metro Medical Dr.
Fayetteville, NC 28304

ELECTRICAL PLANS

Sheet Number
5
of 6

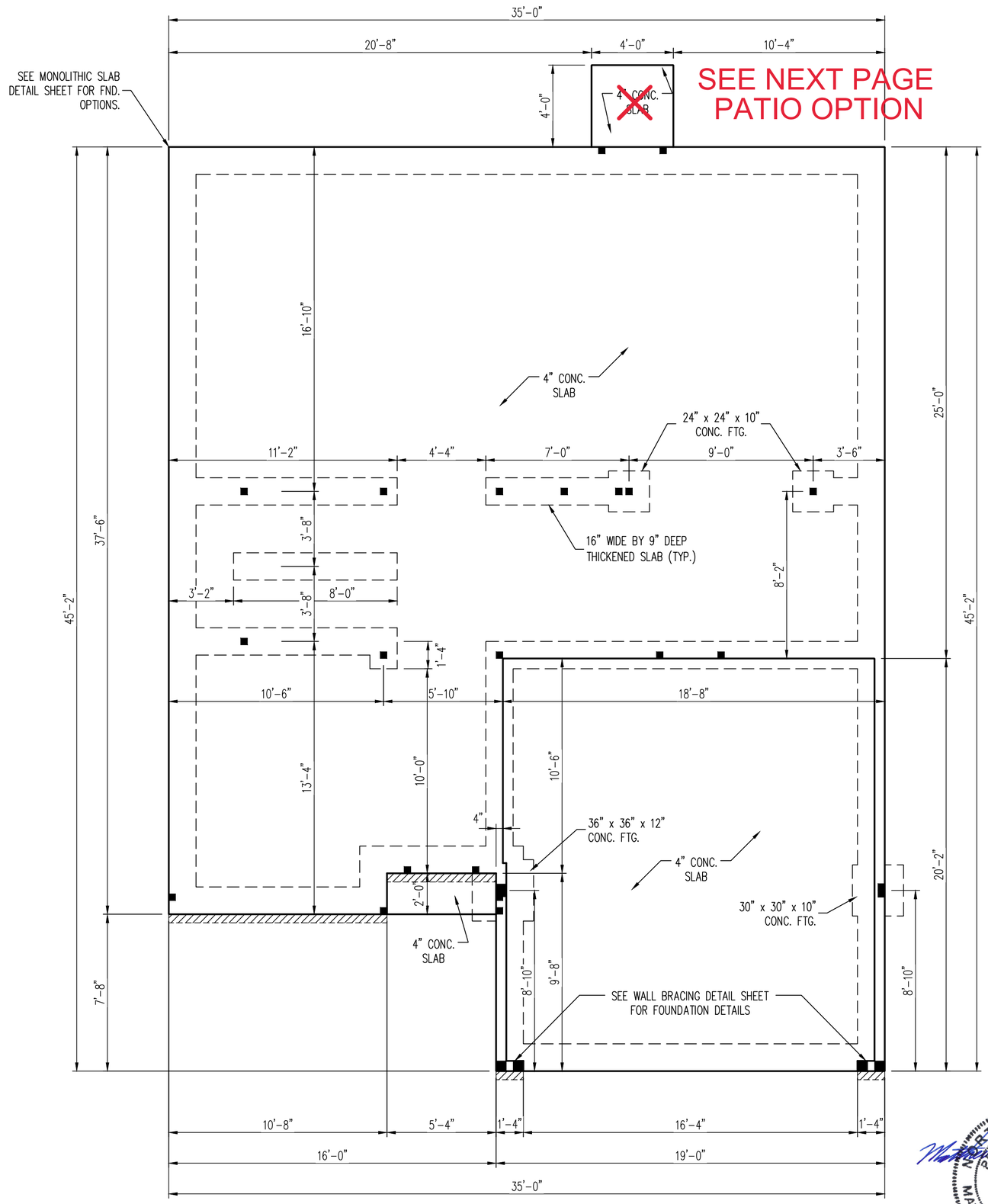

ELEVATION A

NORTH CAROLINA PROFESSIONAL SEAL 33736 ENGINEER MATTHEW G. STROTHER

12/6/2024

130 MPH ULTIMATE DESIGN WIND SPEED NOTES FOR LESS THAN 30' MEAN ROOF HEIGHT:

1. ENGINEER'S SEAL APPLIES ONLY TO STRUCTURAL COMPONENTS. ENGINEER'S SEAL DOES NOT CERTIFY DIMENSIONAL ACCURACY OR ARCHITECTURAL LAYOUT INCLUDING ROOF SYSTEM.
2. STRUCTURAL DESIGN PER NORTH CAROLINA RESIDENTIAL CODE, 2024 EDITION.
3. INSTALL 1/2" ANCHOR BOLTS 4'-0" O.C. AND WITHIN 1'-0" FROM END OF EACH CORNER. ANCHOR BOLTS MUST EXTEND A MINIMUM OF 15" INTO MASONRY OR 7" INTO CONCRETE. LOCATE BOLT WITHIN MIDDLE THIRD OF PLATE WIDTH.
4. MEAN ROOF HEIGHT IS LESS THAN 30 FEET.
5. EXTERIOR WALLS DESIGNED FOR 130 MPH WINDS.
6. ROOF AND WALL CLADDING DESIGNED FOR WIND PRESSURES PER TABLE R301.2.1(1) OF THE 2024 NCRC.
7. INSTALL 7/16" OSB SHEATHING ON ALL EXTERIOR WALLS OF ALL STORIES IN ACCORDANCE WITH SECTION R602.10 OF THE NCRC, 2024 EDITION. SEE THE WALL BRACING NOTES AND DETAILS SHEET FOR MORE INFORMATION.
8. ENERGY EFFICIENCY COMPLIANCE AND INSULATION VALUES OF THE BUILDING TO BE IN ACCORDANCE WITH CHAPTER 11 OF THE NCRC, 2024 EDITION.
9. REFER TO NOTES AND DETAIL SHEETS FOR ADDITIONAL STRUCTURAL INFORMATION.

120 MPH ULTIMATE DESIGN WIND SPEED NOTES FOR LESS THAN 30' MEAN ROOF HEIGHT:

1. ENGINEER'S SEAL APPLIES ONLY TO STRUCTURAL COMPONENTS. ENGINEER'S SEAL DOES NOT CERTIFY DIMENSIONAL ACCURACY OR ARCHITECTURAL LAYOUT INCLUDING ROOF SYSTEM.
2. STRUCTURAL DESIGN PER NORTH CAROLINA RESIDENTIAL CODE, 2024 EDITION.
3. INSTALL 1/2" ANCHOR BOLTS 6'-0" O.C. AND WITHIN 1'-0" FROM END OF EACH CORNER. ANCHOR BOLTS MUST EXTEND A MINIMUM OF 7" INTO MASONRY OR CONCRETE. LOCATE BOLT WITHIN MIDDLE THIRD OF PLATE WIDTH.
4. MEAN ROOF HEIGHT IS LESS THAN 30 FEET.
5. EXTERIOR WALLS DESIGNED FOR 120 MPH WINDS.
6. ROOF AND WALL CLADDING DESIGNED FOR WIND PRESSURES PER TABLE R301.2.1(1) OF THE 2024 NCRC.
7. INSTALL 7/16" OSB SHEATHING ON ALL EXTERIOR WALLS OF ALL STORIES IN ACCORDANCE WITH SECTION R602.10 OF THE NCRC, 2024 EDITION. SEE THE WALL BRACING NOTES AND DETAILS SHEET FOR MORE INFORMATION.
8. ENERGY EFFICIENCY COMPLIANCE AND INSULATION VALUES OF THE BUILDING TO BE IN ACCORDANCE WITH CHAPTER 11 OF THE NCRC, 2024 EDITION.
9. REFER TO NOTES AND DETAIL SHEETS FOR ADDITIONAL STRUCTURAL INFORMATION.

LEGEND	
CONT	CONTINUOUS
XJ	EXTRA JOIST
DJ	DOUBLE JOIST
TJ	TRIPLE JOIST
EA	EACH
FDN	FOUNDATION
FTG	FOOTING
OC	ON CENTER
SPF	SPRUCE PINE FIR
SYP	SOUTHERN YELLOW PINE
TRTD	PRESSURE TREATED
TYP	TYPICAL
UNO	UNLESS NOTED OTHERWISE

J.S. THOMPSON
ENGINEERING, INC
333 EAST SIX FORKS ROAD, SUITE 180 RALEIGH, NC 27609
PHONE: (919) 789-9919 FAX: (919) 789-9921
N.C. LICENSE NO.: C-1733

WASHINGTON
BEN STOUT CONSTRUCTION

DATE: DECEMBER 5, 2024
SCALE: 1/4" = 1'-0"
DRAWN BY: K&A HOME DESIGN
ENGINEERED BY: JAG

S-1.2a
MONO SLAB
FOUNDATION PLAN

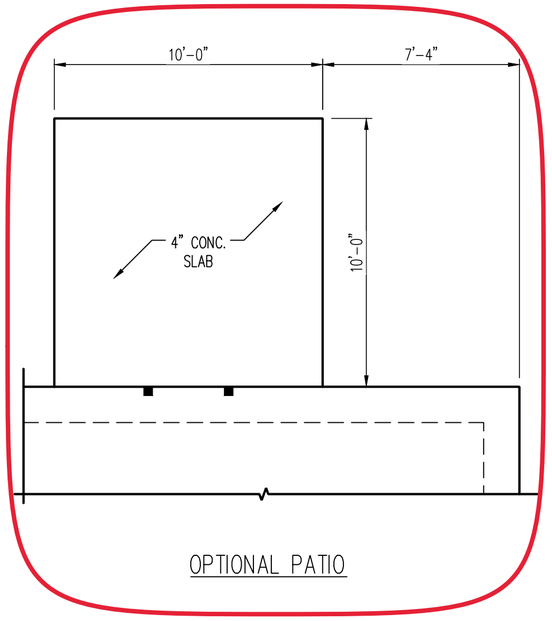

OPTIONAL PATIO

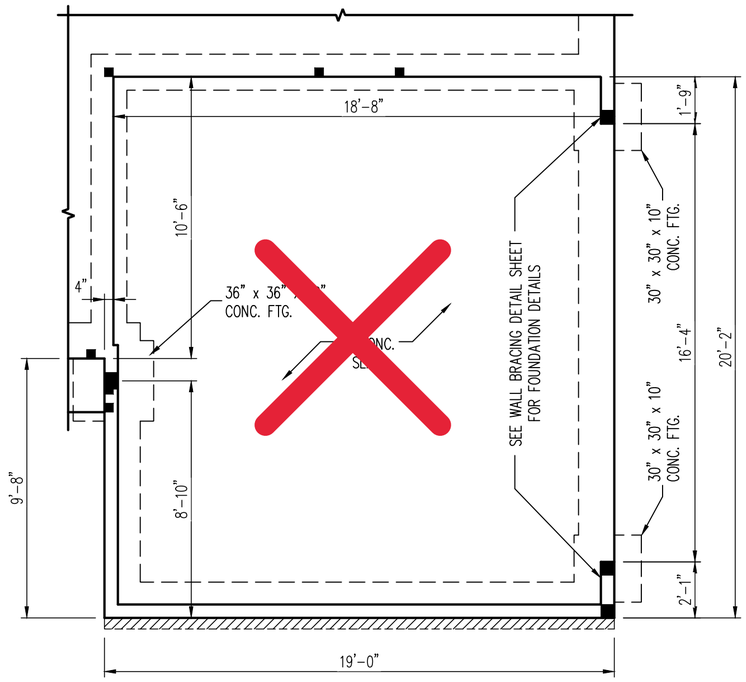

OPTIONAL SIDE LOAD GARAGE

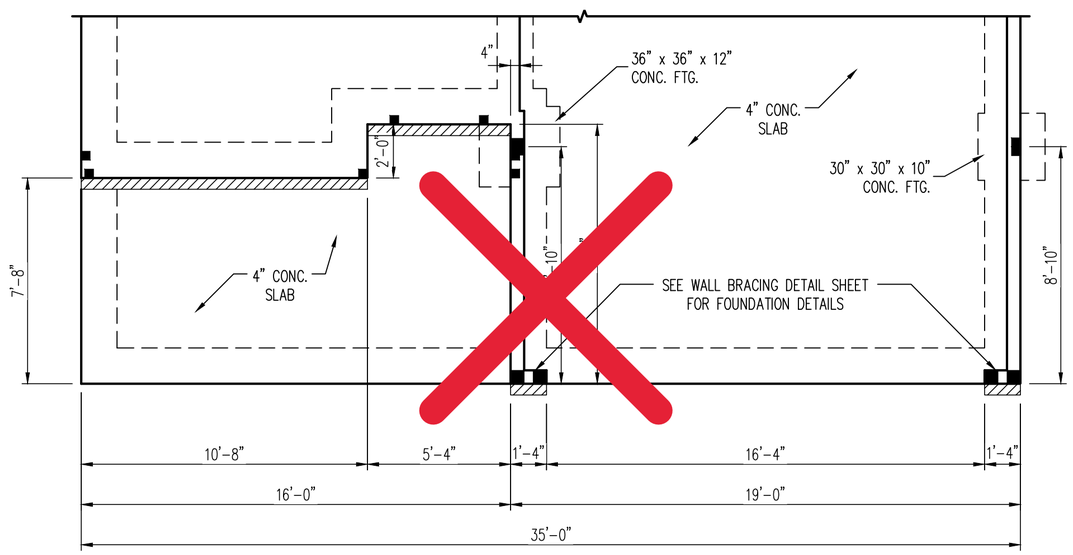

ELEVATION B

J.S. THOMPSON
ENGINEERING, INC
333 EAST SIX FORKS ROAD, SUITE 180 RALEIGH, NC 27609
PHONE: (919) 789-9919 FAX: (919) 789-9921
N.C. LICENSE NO.: C-1733

WASHINGTON
BEN STOUT CONSTRUCTION

NORTH CAROLINA PROFESSIONAL SEAL 33736 ENGINEER MATTHEW G. STROTHER

12/6/2024

DATE: DECEMBER 5, 2024
SCALE: 1/4" = 1'-0"
DRAWN BY: K&A HOME DESIGN
ENGINEERED BY: JAG

S-1.2b
MONO SLAB
FOUNDATION PLAN

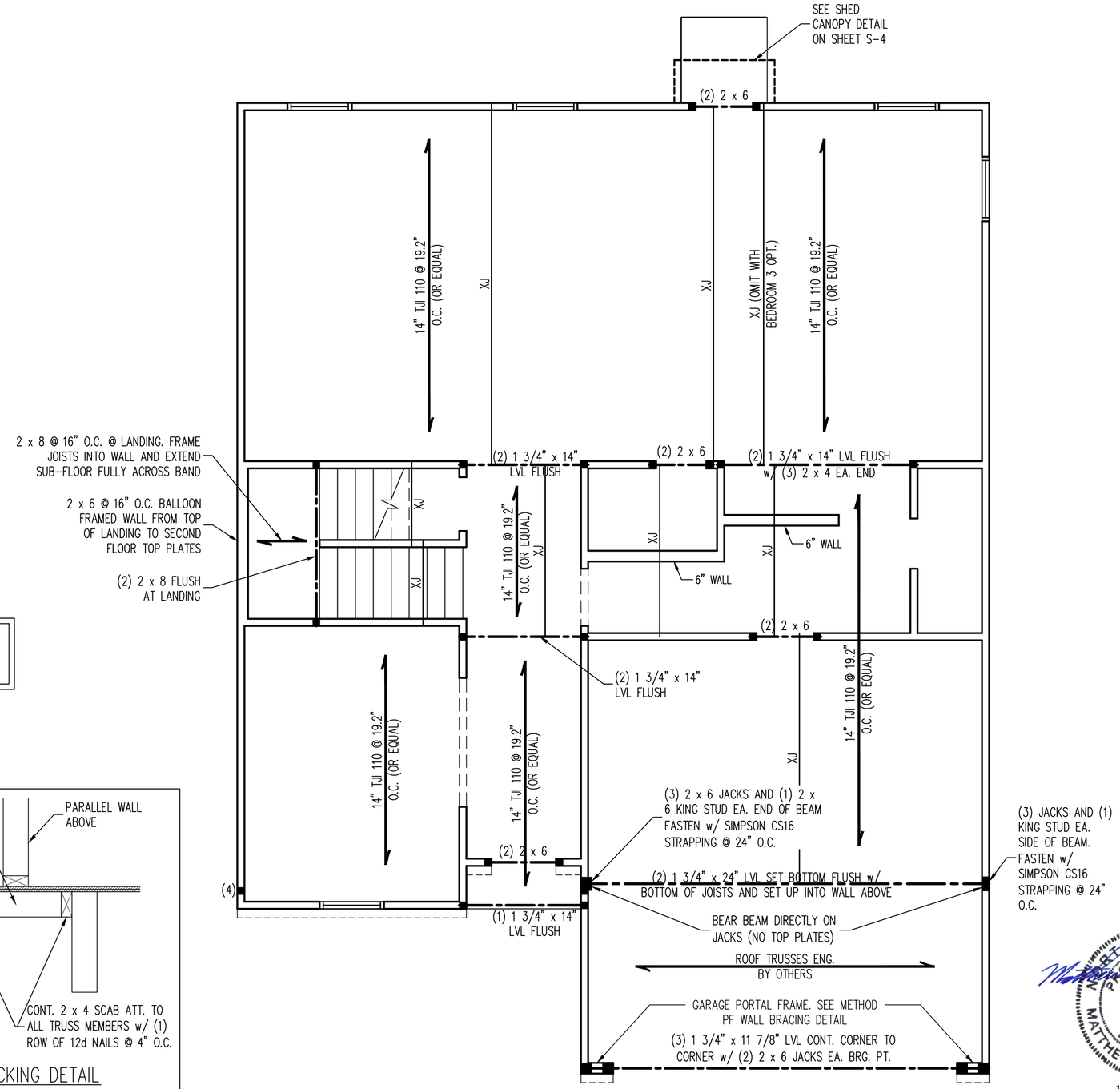

ELEVATION A

WALLS HAVE BEEN ENGINEERED TO BE CONSTRUCTED TO 8'-0" OR 9'-0" HEIGHTS PER ARCHITECTURAL DRAWINGS

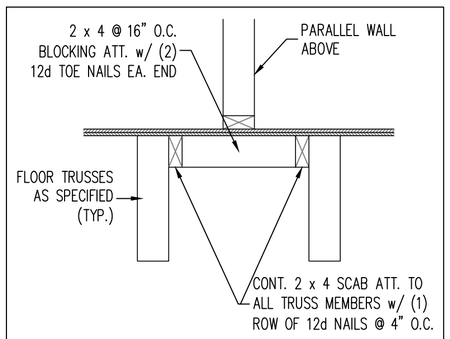

TRUSS BLOCKING DETAIL

INSTALL 2 x 4 @ 16" O.C. BLOCKING BETWEEN ADJACENT TRUSSES UNDER WALLS PARALLEL TO FLOOR TRUSSES WHERE WALL LENGTH EXCEEDS 1/3 OF TRUSS SPAN. TRUSS DESIGNER TO DESIGN ADJACENT TRUSSES FOR ADDITIONAL LOADING FROM WALLS.

NOTE:

- BCI 4500s-1.8 JOISTS MAY BE INSTALLED IN LIEU OF TJI 110 JOISTS AT THE DEPTH AND SPACING INDICATED ON THE PLAN.
- 14" FLOOR TRUSSES ENG. BY OTHERS MAY BE INSTALLED IN LIEU OF I-JOISTS. SEE FLOOR TRUSS BLOCKING DETAIL FOR EXTRA TRUSS ALTERNATIVE.

BRACED WALL DESIGN NOTES:

1. WALL BRACING IS BY ENGINEERED DESIGN PER SECTION R301.1.3 "ENGINEERED DESIGN" OF THE NCRC 2024 EDITION USING BRACING MATERIALS AND METHODS LISTED IN TABLE R602.10.4 ALONG WITH ALTERNATIVE MATERIALS AND METHODS THAT COMPLY WITH ACCEPTED ENGINEERING PRACTICE. BRACED WALL DESIGN IS NOT PRESCRIPTIVE.
2. SHEATH ALL EXTERIOR WALLS w/ 7/16" OSB TO PROVIDE CS-WSP WALL BRACING THAT WILL BRACE THE STRUCTURE FOR ALL LATERAL LOADS AS REQUIRED BY THE NCRC 2024 EDITION.
3. CS-WSP REFERS TO "CONTINUOUSLY SHEATHED WOOD STRUCTURAL PANELS." CONTRACTOR IS TO INSTALL 7/16" OSB ON ALL EXTERIOR WALLS WITH HORIZONTAL JOINTS BLOCKED. ATTACH SHEATHING w/ 8d NAILS SPACED 6" O.C. ALONG PANEL EDGES AND 12" O.C. IN THE FIELD INCLUDING TOP AND BOTTOM PLATES.
4. GB REFERS TO "GYPSUM BOARD." CONTRACTOR IS TO INSTALL 1/2" (MIN.) GYPSUM BOARD ON BOTH SIDES OF WALL (UNO) WHERE NOTED ON THE PLANS ATTACHED WITH 1 1/4" LONG #6 SCREWS OR 1 5/8" LONG 5d COOLER NAILS SPACED 7" O.C. ALONG PANEL EDGES AND IN THE FIELD INCLUDING TOP AND BOTTOM PLATES. WHERE METHOD GB PANELS ARE INSTALLED HORIZONTALLY, BLOCKING OF HORIZONTAL JOINTS IS NOT REQUIRED.
5. BRACED WALL DESIGN APPLIED IN WIND ZONES UP TO 130 MPH. FOR HIGH WIND ZONES, BRACED WALLS ARE TO BE CONSTRUCTED IN ACCORDANCE WITH CHAPTER 45 OF THE NCRC 2024 EDITION.
6. SEE NOTES AND DETAIL SHEETS FOR ADDITIONAL BRACED WALL INFORMATION.

STRUCTURAL NOTES:

1. ALL FRAMING LUMBER TO BE SPF #2 (UNO). ALL TREATED LUMBER TO BE SYP #2 (UNO.)
2. ALL LOAD BEARING HEADERS TO BE (2) 2 x 6 (UNO).
3. PROVIDE AN EXTRA JOIST UNDER ALL WALLS PARALLEL TO FLOOR JOISTS WHERE NOTED ON THE PLANS.
4. WINDOW AND DOOR HEADERS TO BE SUPPORTED w/ (1) JACK STUD AND (1) KING STUD EA. END (UNO.). SEE TABLE R602.7.5 FOR ADDITIONAL KING STUD REQUIREMENTS.
5. SQUARES DENOTE POINT LOADS WHICH REQUIRE SOLID BLOCKING TO GIRDER OR FOUNDATION. ALL SQUARES TO BE (2) STUDS (UNO.)
6. REFER TO NOTES AND DETAIL SHEETS FOR ADDITIONAL STRUCTURAL INFORMATION.

TABLE R602.7.5
MINIMUM NUMBER OF FULL HEIGHT KING STUDS AT EACH END OF HEADERS IN EXTERIOR WALLS IN 120/130 MPH WIND ZONES

HEADER SPAN (FEET)	MINIMUM NUMBER OF FULL HEIGHT STUDS (KINGS)
UP TO 4'	1
> 4' TO 8'	2
> 8' TO 14'	3
> 14' TO 18'	4

NORTH CAROLINA PROFESSIONAL SEAL 33736 ENGINEER MATTHEW G. STROTHER

12/6/2024

LEGEND

CONT	CONTINUOUS
XJ	EXTRA JOIST
DJ	DOUBLE JOIST
TJ	TRIPLE JOIST
EA	EACH
( )	NUMBER OF STUDS
DSP	DOUBLE STUD POCKET
TSP	TRIPLE STUD POCKET
OC	ON CENTER
SPF	SPRUCE PINE FIR
SYP	SOUTHERN YELLOW PINE
TRTD	PRESSURE TREATED
TYP	TYPICAL
UNO	UNLESS NOTED OTHERWISE

J.S. THOMPSON ENGINEERING, INC
333 EAST SIX FORKS ROAD, SUITE 180 RALEIGH, NC 27609
PHONE: (919) 789-9919 FAX: (919) 789-9921
N.C. LICENSE NO.: C-1733

WASHINGTON
BEN STOUT CONSTRUCTION

DATE: DECEMBER 5, 2024
SCALE: 1/4" = 1'-0"
DRAWN BY: K&A HOME DESIGN
ENGINEERED BY: JAG

S-2a
SECOND FLOOR FRAMING PLAN

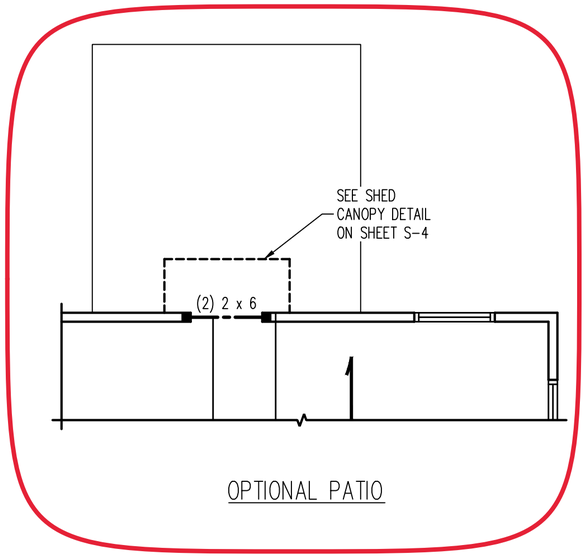

OPTIONAL PATIO

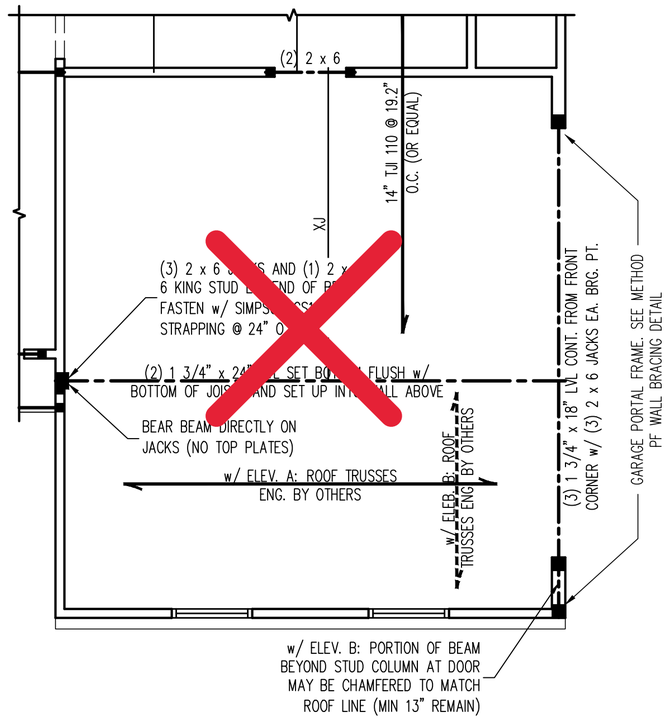

OPTIONAL SIDE LOAD GARAGE

NOTE:
- w/ ELEV. A, MIN. 14" TRUSS HEEL HEIGHT REQUIRED AT LEFT AND RIGHT GARAGE WALLS
- w/ ELEV. B, MIN 9" TRUSS HEEL HEIGHT REQUIRED AT FRONT GARAGE WALL

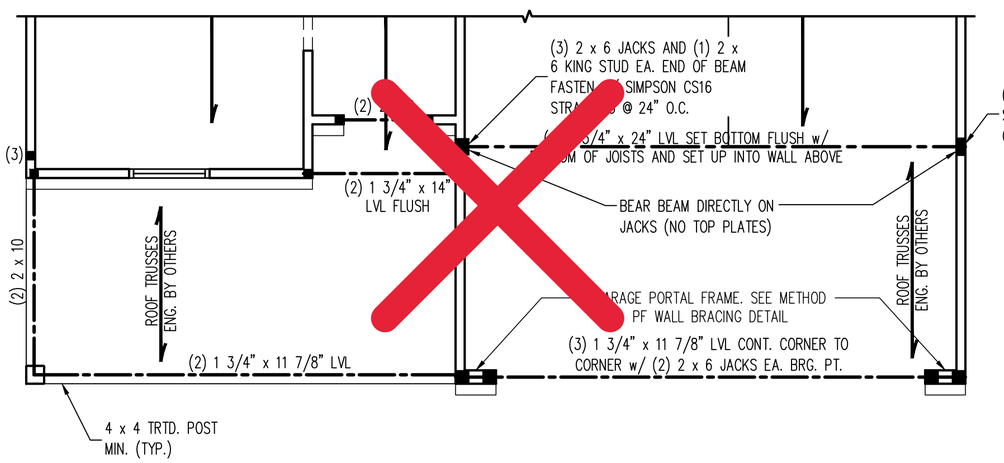

ELEVATION B

WALLS HAVE BEEN ENGINEERED TO BE CONSTRUCTED TO 8'-0" OR 9'-0" HEIGHTS PER ARCHITECTURAL DRAWINGS

NORTH CAROLINA PROFESSIONAL SEAL 33736 ENGINEER MATTHEW G. STROTHER

12/6/2024

J.S. THOMPSON
ENGINEERING, INC
333 EAST SIX FORKS ROAD, SUITE 180 RALEIGH, NC 27609
PHONE: (919) 789-9919 FAX: (919) 789-9921
N.C. LICENSE NO.: C-1733

WASHINGTON
BEN STOUT CONSTRUCTION

DATE: DECEMBER 5, 2024
SCALE: 1/4" = 1'-0"
DRAWN BY: K&A HOME DESIGN
ENGINEERED BY: JAG

S-2b
SECOND FLOOR
FRAMING PLAN

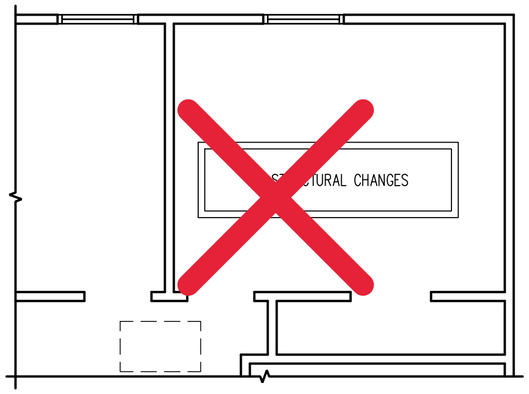

OPTIONAL 3 BEDROOM

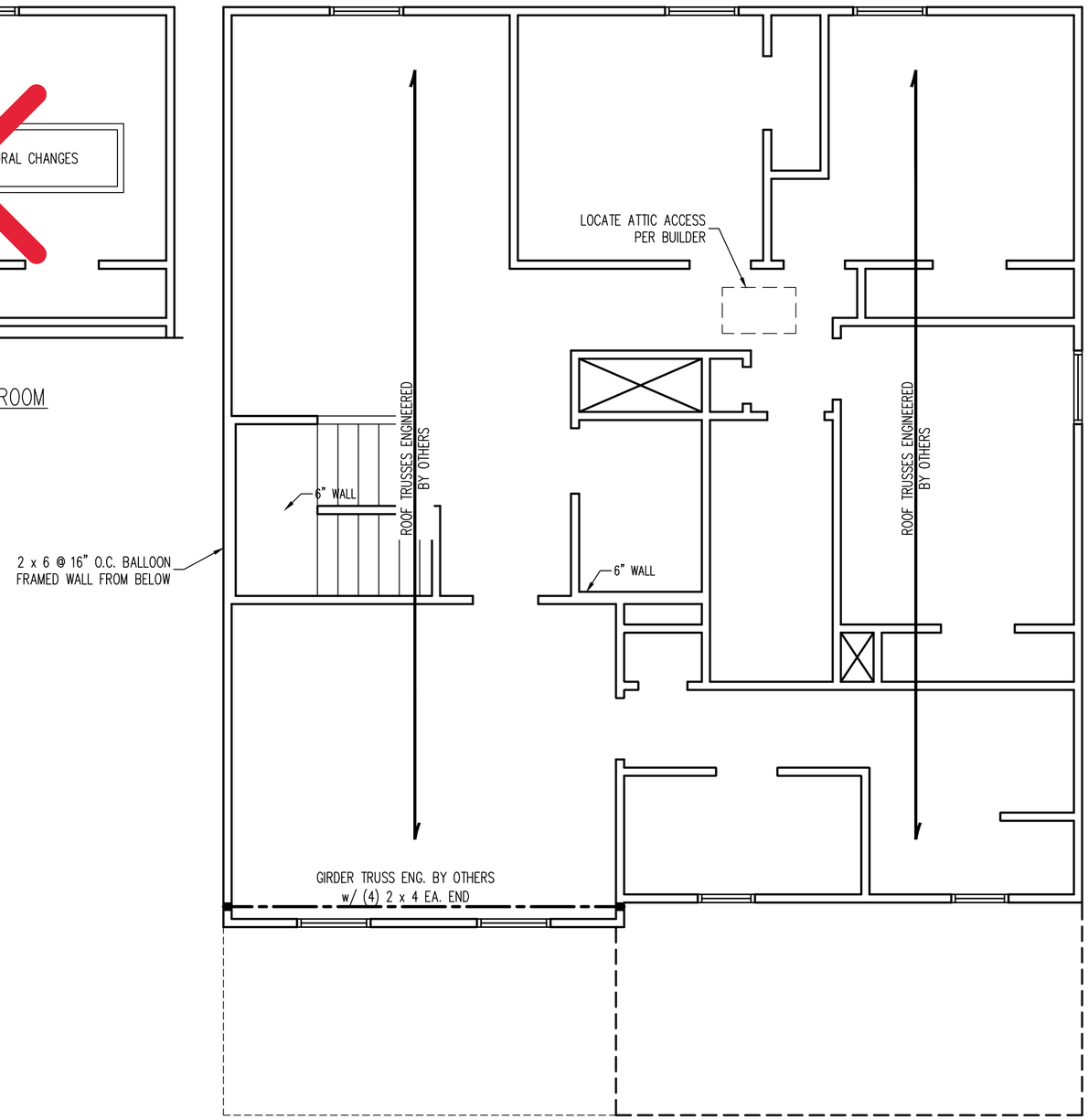

BRACED WALL DESIGN NOTES:

1. WALL BRACING IS BY ENGINEERED DESIGN PER SECTION R301.1.3 "ENGINEERED DESIGN" OF THE NCRC 2024 EDITION USING BRACING MATERIALS AND METHODS LISTED IN TABLE R602.10.4 ALONG WITH ALTERNATIVE MATERIALS AND METHODS THAT COMPLY WITH ACCEPTED ENGINEERING PRACTICE. BRACED WALL DESIGN IS NOT PRESCRIPTIVE.
2. SHEATH ALL EXTERIOR WALLS w/ 7/16" OSB TO PROVIDE CS-WSP WALL BRACING THAT WILL BRACE THE STRUCTURE FOR ALL LATERAL LOADS AS REQUIRED BY THE NCRC 2024 EDITION.
3. CS-WSP REFERS TO "CONTINUOUSLY SHEATHED WOOD STRUCTURAL PANELS." CONTRACTOR IS TO INSTALL 7/16" OSB ON ALL EXTERIOR WALLS WITH HORIZONTAL JOINTS BLOCKED. ATTACH SHEATHING w/ 8d NAILS SPACED 6" O.C. ALONG PANEL EDGES AND 12" O.C. IN THE FIELD INCLUDING TOP AND BOTTOM PLATES.
4. GB REFERS TO "GYPSUM BOARD." CONTRACTOR IS TO INSTALL 1/2" (MIN.) GYPSUM BOARD ON BOTH SIDES OF WALL (UNO) WHERE NOTED ON THE PLANS ATTACHED WITH 1 1/4" LONG #6 SCREWS OR 1 5/8" LONG 5d COOLER NAILS SPACED 7" O.C. ALONG PANEL EDGES AND IN THE FIELD INCLUDING TOP AND BOTTOM PLATES. WHERE METHOD GB PANELS ARE INSTALLED HORIZONTALLY, BLOCKING OF HORIZONTAL JOINTS IS NOT REQUIRED.
5. BRACED WALL DESIGN APPLIED IN WIND ZONES UP TO 130 MPH. FOR HIGH WIND ZONES, BRACED WALLS ARE TO BE CONSTRUCTED IN ACCORDANCE WITH CHAPTER 45 OF THE NCRC 2024 EDITION.
6. SEE NOTES AND DETAIL SHEETS FOR ADDITIONAL BRACED WALL INFORMATION.

STRUCTURAL NOTES:

1. ALL FRAMING LUMBER TO BE #2 SPF (UNO).
2. ALL LOAD BEARING HEADERS TO BE (2) 2 x 6 (UNO).
3. WINDOW AND DOOR HEADERS TO BE SUPPORTED w/ (1) JACK STUD AND (1) KING STUD EA. END (UNO.). SEE TABLE R602.7.5 FOR ADDITIONAL KING STUD REQUIREMENTS.
4. SQUARES DENOTE POINT LOADS WHICH REQUIRE SOLID BLOCKING TO GIRDER OR FOUNDATION. SQUARES TO BE (2) STUDS (UNO.)
5. REFER TO NOTES AND DETAIL SHEETS FOR ADDITIONAL STRUCTURAL INFORMATION.

TABLE R602.7.5
MINIMUM NUMBER OF FULL HEIGHT KING STUDS
AT EACH END OF HEADERS IN EXTERIOR
WALLS IN 120/130 MPH WIND ZONES

HEADER SPAN (FEET)	MINIMUM NUMBER OF FULL HEIGHT STUDS (KINGS)
UP TO 4'	1
> 4' TO 8'	2
> 8' TO 14'	3
> 14' TO 18'	4

NORTH CAROLINA PROFESSIONAL SEAL 33736 ENGINEER MATTHEW G. STROTHER

12/6/2024

LEGEND

CONT	CONTINUOUS
XT	EXTRA TRUSS
TS	TRUSS SUPPORT
EA	EACH
( )	NUMBER OF STUDS
DSP	DOUBLE STUD POCKET
TSP	TRIPLE STUD POCKET
OC	ON CENTER
SPF	SPRUCE PINE FIR
SYP	SOUTHERN YELLOW PINE
TRTD	PRESSURE TREATED
TYP	TYPICAL
UNO	UNLESS NOTED OTHERWISE

J.S. THOMPSON
ENGINEERING, INC
333 EAST SIX FORKS ROAD, SUITE 180 RALEIGH, NC 27609
PHONE: (919) 789-9919 FAX: (919) 789-9921
N.C. LICENSE NO.: C-1733

WASHINGTON
BEN STOUT CONSTRUCTION

DATE: DECEMBER 5, 2024

SCALE: 1/4" = 1'-0"

DRAWN BY: K&A HOME DESIGN

ENGINEERED BY: JAG

S-3
ATTIC FLOOR
FRAMING PLAN

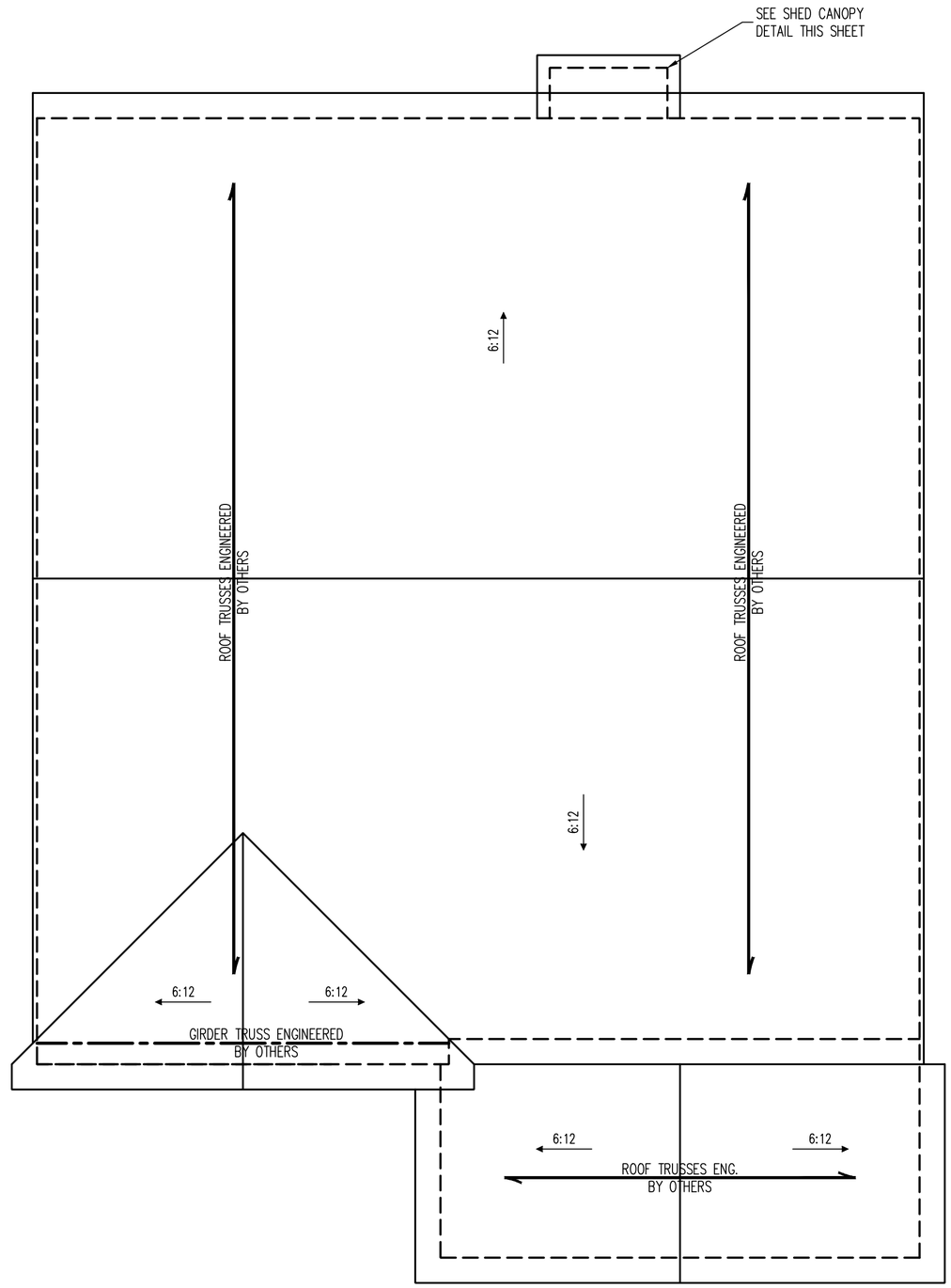

ELEVATION A

STRUCTURAL NOTES:

1. ALL FRAMING LUMBER TO BE #2 SPF (UNO).
2. STICK FRAME OVER-FRAMED ROOF SECTIONS W/ 2 x 8 RIDGES, 2 x 6 RAFTERS @ 16" O.C. AND FLAT 2 x 10 VALLEYS OR USE VALLEY TRUSSES.
3. FASTEN FLAT VALLEYS TO RAFTERS OR TRUSSES WITH SIMPSON H2.5A HURRICANE TIES @ 32" O.C. MAX. PASS HURRICANE TIES THROUGH NOTCH IN ROOF SHEATHING. EACH RAFTER IS TO BE FASTENED TO THE FLAT VALLEY WITH A MIN. OF (6) 12d TOE NAILS.
4. REFER TO SECTION R802.11 OF THE 2024 NCRC FOR REQUIRED UPLIFT RESISTANCE AT RAFTERS AND TRUSSES.
5. REFER TO NOTES AND DETAIL SHEETS FOR ADDITIONAL STRUCTURAL INFORMATION.

NOTE: REFER TO ARCHITECTURAL DRAWINGS FOR ROOF PITCHES, PLATE HEIGHTS, DIMENSIONS, OVERHANG WIDTHS, AND ATTIC VENT CALCS.

LEGEND	
XT	EXTRA TRUSS
TS	TRUSS SUPPORT
XR	EXTRA RAFTER
RS	RAFTER SUPPORT
CONT	CONTINUOUS
EA	EACH
OC	ON CENTER
SPF	SPRUCE PINE FIR
SYP	SOUTHERN YELLOW PINE
TYP	TYPICAL
UNO	UNLESS NOTED OTHERWISE

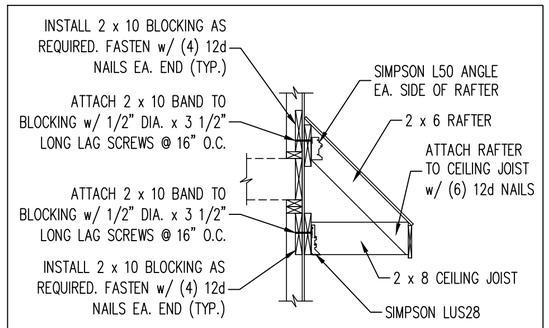

SHED CANOPY DETAIL
NTS

NORTH CAROLINA PROFESSIONAL SEAL 33736 ENGINEER MATTHEW G. STROTHER

12/6/2024

J.S. THOMPSON
ENGINEERING, INC
333 EAST SIX FORKS ROAD, SUITE 180 RALEIGH, NC 27609
PHONE: (919) 789-9919 FAX: (919) 789-9921
N.C. LICENSE NO.: C-1733

WASHINGTON
BEN STOUT CONSTRUCTION

DATE: DECEMBER 5, 2024
SCALE: 1/4" = 1'-0"
DRAWN BY: K&A HOME DESIGN
ENGINEERED BY: JAG

S-4a
ROOF FRAMING PLAN

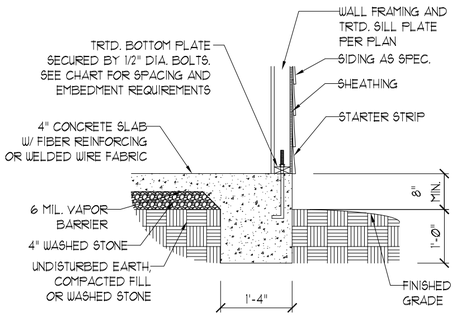

TYPICAL SLAB (1)

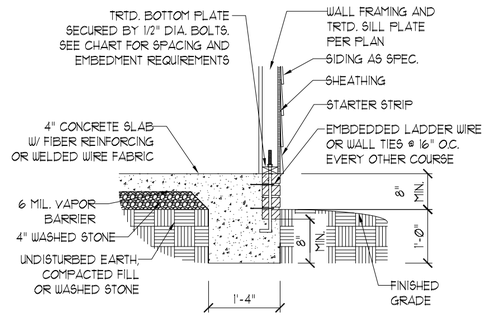

TYPICAL SLAB w/ BRICK LEDGE (2)

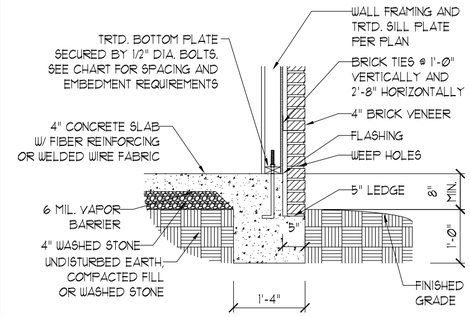

TYPICAL SLAB w/ BRICK VENEER LEDGE (3)

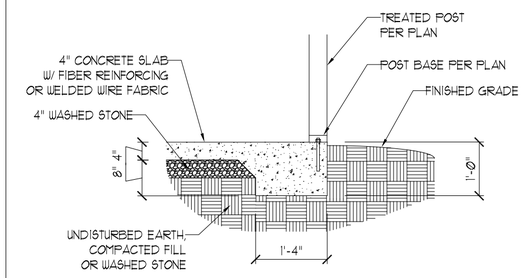

PORCH/SCREEN PORCH (4)

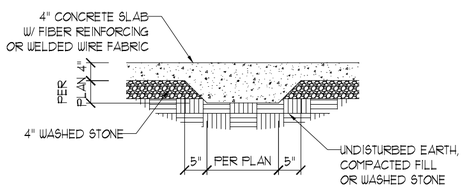

TYPICAL THICKENED SLAB (5)

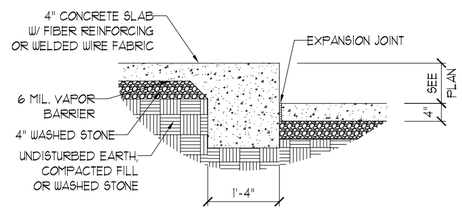

SLAB FLOOR CHANGE (6)

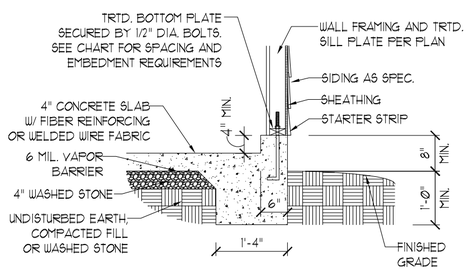

GARAGE CURB (7)

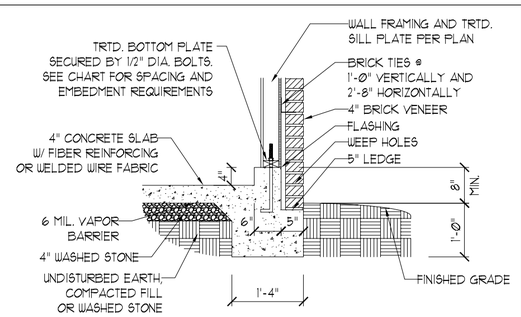

GARAGE CURB w/ BRICK LEDGE (8)

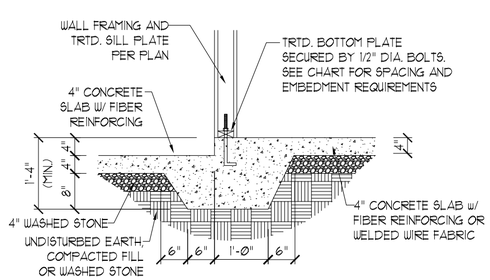

STEP IN GARAGE (9)

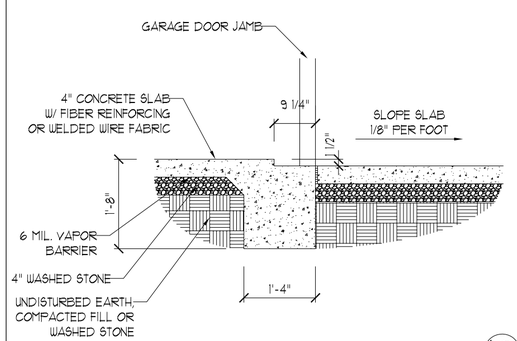

SLAB AT GARAGE DOOR (10)

ANCHOR SPACING AND EMBEDMENT

WIND ZONE	120 MPH	130 MPH
SPACING	6'-0" O.C. INSTALL MIN. (2) ANCHORS PER PLATE SECTION AND (1) ANCHOR WITHIN 12" OF CORNERS	4'-0" O.C. INSTALL MIN. (2) ANCHORS PER PLATE SECTION AND (1) ANCHOR WITHIN 12" OF CORNERS
EMBEDMENT	7"	15" INTO MASONRY 7" INTO CONCRETE

NOTE:

THREADED ROD WITH EPOXY, SIMPSON TITEN HD, OR APPROVED ANCHORS SPACED AS REQUIRED TO PROVIDE EQUIVALENT ANCHORAGE TO 1/2" DIAMETER ANCHOR BOLTS MAY BE USED IN LIEU OF 1/2" ANCHOR BOLTS.

NORTH CAROLINA PROFESSIONAL SEAL 33736 ENGINEER MATTHEW G. STROTHER

12/6/2024

This sealed page is to be used in conjunction with a full plan set engineered by J.S. Thompson Engineering, Inc. only. Use of this individual sealed page within architectural pages or shop drawings by others is a punishable offense under N.C. Statute § 89C-23

J.S. THOMPSON
ENGINEERING, INC
333 EAST SIX FORKS ROAD, SUITE 180 RALEIGH, NC 27609
PHONE: (919) 789-9919 FAX: (919) 789-9921
N.C. LICENSE NO.: C-1733

MONOLITHIC SLAB FOUNDATION DETAILS

DATE: NOVEMBER 1, 2024
SCALE: NTS
DRAWN BY: JST
ENGINEERED BY: JST

FOUNDATION DETAILS

GENERAL WALL BRACING NOTES:

1. WALL BRACING IS BY ENGINEERED DESIGN PER SECTION R301.1.3 "ENGINEERED DESIGN" OF THE NCRC 2024 EDITION USING BRACING MATERIALS AND METHODS LISTED IN TABLE R602.10.4 ALONG WITH ALTERNATIVE MATERIALS AND METHODS THAT COMPLY WITH ACCEPTED ENGINEERING PRACTICE. BRACED WALL DESIGN IS NOT PRESCRIPTIVE.
2. SEE THIS SHEET FOR GENERAL DETAILS. REFER TO THE 2024 NCRC FOR ADDITIONAL INFORMATION AS NEEDED.
3. BRACED EXTERIOR WALLS SUPPORTING ROOF TRUSSES AND RAFTERS, INCLUDING STORIES BELOW THE TOP FLOOR, HAVE BEEN DESIGNED PER R602.3.5 (3). WALL SHEATHING AND FASTENERS HAVE BEEN DESIGNED TO RESIST COMBINED UPLIFT AND SHEAR FORCES IN ACCORDANCE WITH ACCEPTED ENGINEERED PRACTICE.
4. SEE STRUCTURAL SHEETS FOR HOLD DOWN TYPE AND LOCATIONS WHERE REQUIRED AND ANY SPECIAL NOTES OR REQUIREMENTS.
5. ALL EXTERIOR WALLS ARE TO BE SHEATHED WITH CS-WSP IN ACCORDANCE WITH SECTION R602.10 UNLESS NOTED OTHERWISE.
6. ALL EXTERIOR AND INTERIOR WALLS TO HAVE 1/2" GYPSUM INSTALLED. WHEN NOT USING METHOD "GB", GYPSUM TO BE FASTENED PER TABLE R702.3.5. METHOD GB TO BE FASTENED PER TABLE R602.10.4
7. CS-WSP REFERS TO THE "CONTINUOUS SHEATHING – WOOD STRUCTURAL PANELS" WALL BRACING METHOD. 7/16" OSB SHEATHING IS TO BE INSTALLED ON ALL EXTERIOR WALLS WITH JOINTS BLOCKED. ATTACH SHEATHING w/ 6d COMMON NAILS OR 8d (2 1/2" LONG x 0.113" DIAMETER) NAILS SPACED 6" O.C. ALONG PANEL EDGES AND 12" O.C. IN THE FIELD (U.N.O.).
8. GB REFERS TO THE "GYPSUM BOARD" WALL BRACING METHOD. 1/2" (MIN.) GYPSUM WALL BOARD IS TO BE INSTALLED ON BOTH SIDES OF THE BRACED WALL FASTENED WITH 1 1/4" SCREWS OR 1 5/8" NAILS SPACED 7" O.C. ALONG PANEL EDGES INCLUDING TOP AND BOTTOM PLATES AND INTERMEDIATE SUPPORTS (U.N.O.). VERIFY ALL FASTENER OPTIONS FOR 1/2" AND 5/8" GYPSUM PRIOR TO CONSTRUCTION. FOR INTERIOR FASTENER OPTIONS SEE TABLE R702.3.5. FOR EXTERIOR FASTENER OPTIONS SEE TABLE R602.3(1). WHERE METHOD GB PANELS ARE INSTALLED HORIZONTALLY, BLOCKING OF HORIZONTAL JOINTS IS NOT REQUIRED. EXTERIOR GB TO BE INSTALLED VERTICALLY.

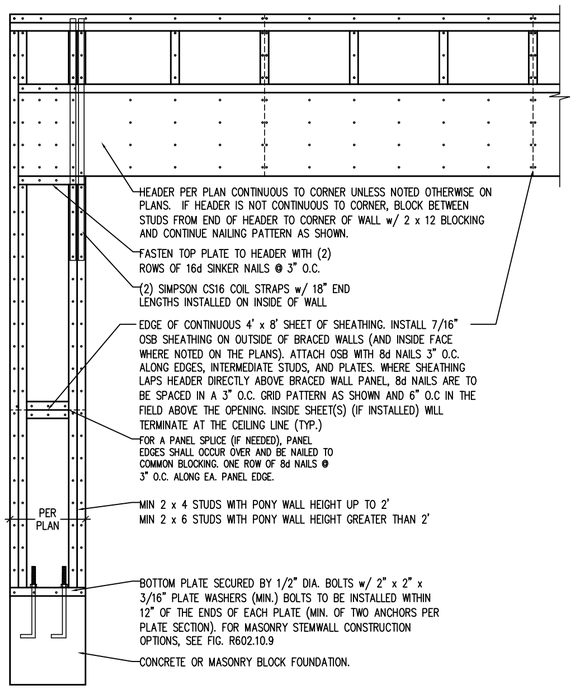

OVER CONCRETE OR MASONRY BLOCK FOUNDATION

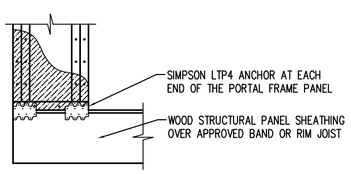

OVER RAISED WOOD FLOOR – FRAMING ANCHOR OPTION

* APPLICABLE w/ GREATER THAN 12" KNEE WALL HEIGHTS IN CRAWL SPACE AND ABOVE FRAMED BASEMENT WALLS *

METHOD PF–PORTAL FRAME DETAIL (1)

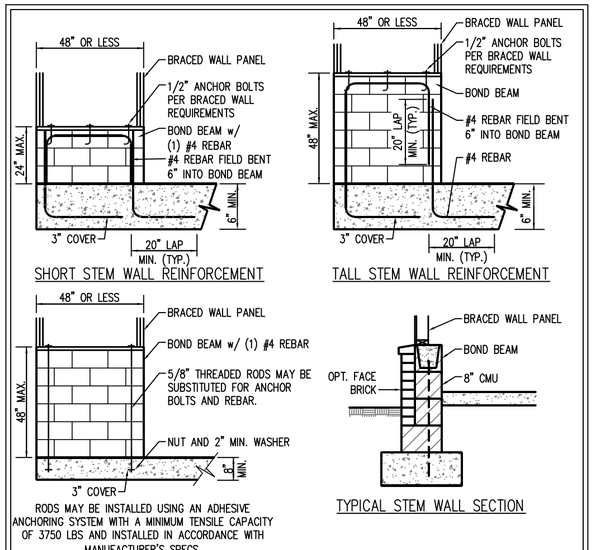

NOTE: GROUT BOND BEAMS AND ALL CELLS WHICH CONTAIN REBAR, THREADED RODS AND ANCHOR BOLTS

MASONRY STEM WALLS SUPPORTING BRACED WALL PANELS (2)

PER FIGURE R602.10.9

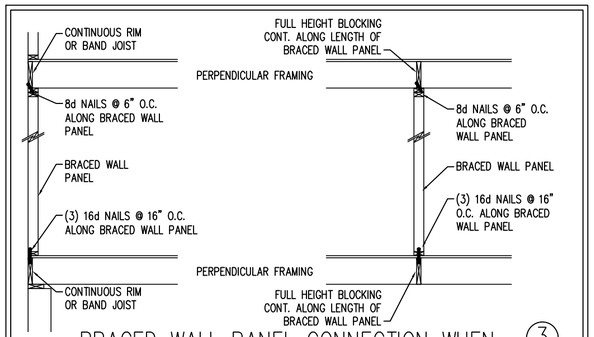

BRACED WALL PANEL CONNECTION WHEN PERPENDICULAR TO FLOOR/CEILING FRAMING (3)

PER FIGURE R602.10.8(1)

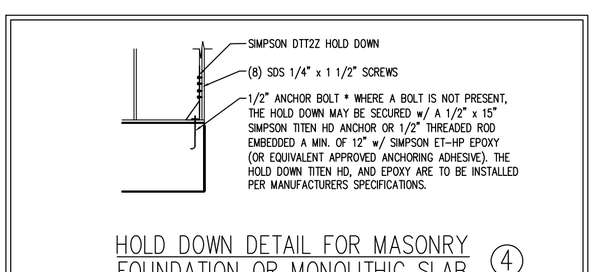

HOLD DOWN DETAIL FOR MASONRY FOUNDATION OR MONOLITHIC SLAB (4)

* APPLICABLE ONLY WHERE SPECIFIED ON PLAN *

BRACED WALL PANEL CONNECTION WHEN PARALLEL TO FLOOR/CEILING FRAMING (5)

PER FIG. R602.10.8(2)

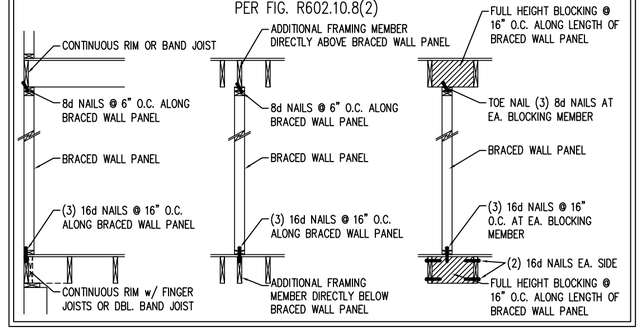

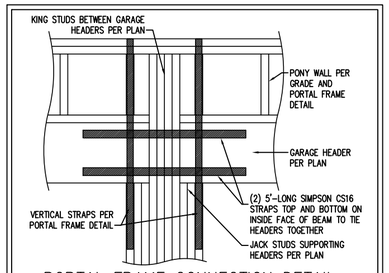

PORTAL FRAME CONNECTION DETAIL BETWEEN GARAGE DOOR HEADERS (6)

(REFERENCE PORTAL FRAME DETAIL FOR ALL OTHER PORTAL FRAME INFORMATION)

BRACED WALL PANEL CONNECTION TO PERPENDICULAR RAFTERS (7)

PER FIGURE R602.10.8.2(1)

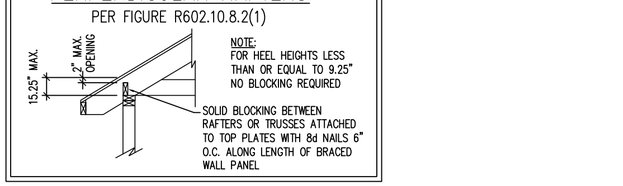

BRACED WALL PANEL CONNECTION TO PERPENDICULAR ROOF TRUSSES (8)

PER FIGURE R602.10.8.2(3)
(OR ALTERNATIVE: FIGURE R602.10.8.2(2))

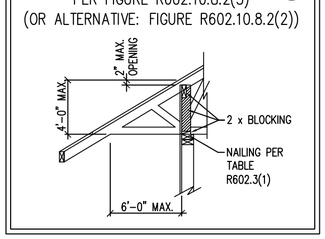

12/6/2024

This sealed page is to be used in conjunction with a full plan set engineered by J.S. Thompson Engineering, Inc. only. Use of this individual sealed page within architectural pages or shop drawings by others is a punishable offense under N.C. Statute § 89C-23

J.S. THOMPSON
ENGINEERING, INC
333 EAST SIX FORKS ROAD, SUITE 180 RALEIGH, NC 27609
PHONE: (919) 789-9919 FAX: (919) 789-9921
N.C. LICENSE NO.: C-1733

WALL BRACING NOTES AND DETAILS

DATE: NOVEMBER 1, 2024
SCALE: NOT TO SCALE
DRAWN BY: JST
ENGINEERED BY: JST

BRACED WALL NOTES AND DETAILS AND PORTAL FRAME DETAIL

GENERAL NOTES

1. ENGINEER'S SEAL APPLIES ONLY TO STRUCTURAL COMPONENTS INCLUDING ROOF RAFTERS, HIPS, VALLEYS, RIDGES, FLOORS, WALLS, BEAMS, HEADERS, COLUMNS, CANTILEVERS, OFFSET LOAD BEARING WALLS, PIERS, GIRDER SYSTEM AND FOOTING. ENGINEER'S SEAL DOES NOT CERTIFY DIMENSIONAL ACCURACY OF ARCHITECTURAL LAYOUT INCLUDING ROOF. ENGINEER'S SEAL DOES NOT APPLY TO I-JOIST OR FLOOR/ROOF TRUSS LAYOUT DESIGN AND ACCURACY.

2. ALL CONSTRUCTION SHALL CONFORM TO THE LATEST REQUIREMENTS OF THE NORTH CAROLINA RESIDENTIAL CODE (NCRC), 2024 EDITION, PLUS ALL LOCAL CODES AND REGULATIONS. THE STRUCTURAL ENGINEER IS NOT RESPONSIBLE FOR, AND WILL NOT HAVE CONTROL OF, CONSTRUCTION MEANS, METHODS, TECHNIQUES, SEQUENCES OR PROCEDURES, OR SAFETY PRECAUTIONS AND PROGRAMS IN CONNECTION WITH THE CONSTRUCTION WORK. NOR WILL THE ENGINEER BE RESPONSIBLE FOR THE CONTRACTORS FAILURE TO CARRY OUT THE CONSTRUCTION WORK IN ACCORDANCE WITH THE CONTRACT DOCUMENTS.

3. STRUCTURAL DESIGN BASED ON THE PROVISIONS OF THE NCRC, 2024 EDITION (R301.4 – R301.7)

DESIGN CRITERIA:	LIVE LOAD (PSF)	DEAD LOAD (PSF)	DEFLECTION (IN)
ATTIC WITH LIMITED STORAGE	20	10	L/240 (L/360 w/ BRITTLE FINISHES)
ATTIC WITHOUT STORAGE	10	10	L/360
DECKS	40	10	L/360
EXTERIOR BALCONIES	40	10	L/360
FIRE ESCAPES	40	10	L/360
HANDRAILS/GUARDRAILS	200	10	L/360
PASSENGER VEHICLE GARAGE	50	10	L/360
ROOMS OTHER THAN SLEEPING ROOM	40	10	L/360
SLEEPING ROOMS	30	10	L/360
STAIRS	40	10	L/360
WIND LOAD	(BASED ON TABLE R301.2(4) WIND ZONE AND EXPOSURE)		
GROUND SNOW LOAD: Pg	20 (PSF)		

SEISMIC DESIGN CATEGORY: B

NORTH CAROLINA PROFESSIONAL SEAL 33736 ENGINEER MATTHEW G. STROTHER

12/6/2024

– I-JOIST SYSTEMS DESIGNED WITH 12 PSF DEAD LOAD AND DEFLECTION (IN) OF L/480
– FLOOR TRUSS SYSTEMS DESIGNED WITH 15 PSF DEAD LOAD

– CLADDING DESIGNED FOR:

120 MPH WIND ZONE		POS. (PSF) PRESSURE	NEG. (PSF) PRESSURE
GABLE ROOF CLADDING	FLAT ROOF	+ 6.3	– 44.5
	2.25 TO 5/12	+ 9.6	– 49.8
	5 TO 7/12	+ 11.6	– 41.9
	7 TO 12/12	+ 14.2	– 35.3
HIP ROOF CLADDING	2.25 TO 5/12	+ 11.6	– 36.6
	5 TO 7/12	+ 11.6	– 28.7
	7 TO 12/12	+ 11.1	– 35.6
WALL CLADDING		+ 15.5	– 20.8

130 MPH WIND ZONE		POS. (PSF) PRESSURE	NEG. (PSF) PRESSURE
GABLE ROOF CLADDING	FLAT ROOF	+ 7.4	– 52.2
	2.25 TO 5/12	+ 11.3	– 58.4
	5 TO 7/12	+ 13.6	– 49.2
	7 TO 12/12	+ 16.7	– 41.4
HIP ROOF CLADDING	2.25 TO 5/12	+ 13.6	– 43
	5 TO 7/12	+ 13.6	– 33.7
	7 TO 12/12	+ 13	– 41.7
WALL CLADDING		+ 18.2	– 24.4

140 MPH WIND ZONE		POS. (PSF) PRESSURE	NEG. (PSF) PRESSURE
GABLE ROOF CLADDING	FLAT ROOF	+ 8.6	– 60.6
	2.25 TO 5/12	+ 13.1	– 67.8
	5 TO 7/12	+ 15.8	– 57
	7 TO 12/12	+ 19.4	– 48
HIP ROOF CLADDING	2.25 TO 5/12	+ 15.8	– 49.8
	5 TO 7/12	+ 15.8	– 39.1
	7 TO 12/12	+ 15.1	– 48.4
WALL CLADDING		+ 21.1	– 28.3

150 MPH WIND ZONE		POS. (PSF) PRESSURE	NEG. (PSF) PRESSURE
GABLE ROOF CLADDING	FLAT ROOF	+ 9.9	– 69.6
	2.25 TO 5/12	+ 15	– 77.8
	5 TO 7/12	+ 18.1	– 65.4
	7 TO 12/12	+ 22.2	– 55.2
HIP ROOF CLADDING	2.25 TO 5/12	+ 18.1	– 57.2
	5 TO 7/12	+ 18.1	– 44.9
	7 TO 12/12	+ 17.3	– 55.6
WALL CLADDING		+ 24.3	– 32.5

4. FOR 115 AND 120 MPH WIND ZONES, FOUNDATION ANCHORAGE IS TO COMPLY WITH SECTION R403.1.6 OF THE NCRC, 2024 EDITION. FOR 130 MPH, 140 MPH, AND 150 MPH WIND ZONES, FOUNDATION ANCHORAGE IS TO COMPLY WITH SECTION 4504 OF THE NCRC, 2024 EDITION.

5. ENERGY EFFICIENCY COMPLIANCE AND INSULATION VALUES OF THE BUILDING TO BE IN ACCORDANCE WITH CHAPTER 11 OF THE NCRC, 2024 EDITION.

FOOTING AND FOUNDATION NOTES

1. FOUNDATION DESIGN BASED ON A MINIMUM ALLOWABLE BEARING CAPACITY OF 2000 PSF. CONTACT GEOTECHNICAL ENGINEER IF BEARING CAPACITY IS NOT ACHIEVED.

2. FOR ALL CONCRETE SLABS AND FOOTINGS, THE AREA WITHIN THE PERIMETER OF THE BUILDING ENVELOPE SHALL HAVE ALL VEGETATION, TOP SOIL AND FOREIGN MATERIAL REMOVED. FILL MATERIAL SHALL BE FREE OF VEGETATION AND FOREIGN MATERIAL. THE FILL SHALL BE COMPACTED TO ASSURE UNIFORM SUPPORT OF THE SLAB, AND EXCEPT WHERE APPROVED, THE FILL DEPTHS SHALL NOT EXCEED 24" FOR CLEAN SAND OR GRAVEL. EXCEPTION: #57 OR #67 STONE MAY BE USED AS FILL FOR MAXIMUM DEPTH OF 4 FEET WITHOUT CONSOLIDATION. A 4" THICK BASED COURSE CONSISTING OF CLEAN GRADED SAND OR GRAVEL SHALL BE PLACED. A BASE COURSE IS NOT REQUIRED WHERE A CONCRETE SLAB IS INSTALLED ON WELL-DRAINED OR SAND-GRAVEL MIXTURE SOILS CLASSIFIED AS GROUP 1, ACCORDING TO THE UNITED SOIL CLASSIFICATION SYSTEM IN ACCORDANCE WITH TABLE R405.1 OF THE NCRC, 2024 EDITION.

3. PROPERLY DEWATER EXCAVATION PRIOR TO POURING CONCRETE WHEN BOTTOM OF CONCRETE SLAB IS AT OR BELOW WATER TABLE. IF APPLICABLE, 3/4" – 1" DEEP CONTROL JOINTS ARE TO BE SAWED WITHIN 4 TO 12 HOURS OF CONCRETE FINISHING AND WALL LOCATIONS HAVE BEEN MARKED. ADJUST WHERE NECESSARY.

4. CONCRETE SHALL CONFORM TO SECTION R402.2 OF THE NCRC, 2024 EDITION. CONCRETE REINFORCING STEEL TO BE ASTM A615 GRADE 60. WELDED WIRE FABRIC TO BE ASTM A185. MAINTAIN A MINIMUM CONCRETE COVER AROUND REINFORCING STEEL OF 3" IN FOOTINGS AND 1 1/2" IN SLABS. FOR POURED CONCRETE WALLS, CONCRETE COVER FOR REINFORCING STEEL MEASURED FROM THE INSIDE FACE OF THE WALL SHALL NOT BE LESS THAN 3/4". CONCRETE COVER FOR REINFORCING STEEL MEASURED FROM THE OUTSIDE FACE OF THE WALL SHALL NOT BE LESS THAN 1 1/2" FOR #5 BARS OR SMALLER, AND NOT LESS THAN 2" FOR #6 BARS OR LARGER.

5. MASONRY UNITS TO CONFORM TO ACE 530/ASCE 5/TMS 402. MORTAR SHALL CONFORM TO ASTM C270.

6. THE UNSUPPORTED HEIGHT OF MASONRY PIERS SHALL NOT EXCEED FOUR TIMES THEIR LEAST DIMENSION FOR UNFILLED HOLLOW CONCRETE MASONRY UNITS AND TEN TIMES THEIR LEAST DIMENSION FOR SOLID OR SOLID FILLED PIERS. PERS MAY BE FILLED SOLID WITH CONCRETE OR TYPE M OR S MORTAR. PIERS AND WALLS SHALL BE CAPPED WITH 8" OF SOLID MASONRY.

7. THE CENTER OF EACH OF THE PIERS SHALL BEAR IN THE MIDDLE THIRD OF ITS RESPECTIVE FOOTING. EACH GIRDER SHALL BEAR IN THE MIDDLE THIRD OF THE PIERS.

8. ALL CONCRETE AND MASONRY FOUNDATION WALLS ARE TO BE CONSTRUCTED IN ACCORDANCE WITH THE PROVISIONS OF SECTION R404 OF THE NCRC, 2024 EDITION OR IN ACCORDANCE WITH ACI 318, ACI 332, NCMA TR68-A OR ACE 530/ASCE 5/TMS 402. MASONRY FOUNDATION WALLS ARE TO BE REINFORCED PER TABLE R404.1.1(1), R404.1.1(2), R404.1.1(3), OR R404.1.1(4) OF THE NCRC, 2024 EDITION. CONCRETE FOUNDATION WALLS ARE TO BE REINFORCED PER TABLE R404.1.2(8) OF THE NCRC, 2024 EDITION. STEP CONCRETE FOUNDATION WALLS TO 2 x 6 FRAMED WALLS AT 16" O.C. WHERE GRADE PERMITS (UNO).

FRAMING NOTES

1. ALL FRAMING LUMBER SHALL BE #2 SPF MINIMUM (Fb = 875 PSI, Fv = 375 PSI, E = 1600000 PSI) UNLESS NOTED OTHERWISE (UNO). ALL TREATED LUMBER SHALL BE #2 SYP MINIMUM (Fb = 975 PSI, Fv =175 PSI, E = 1600000 PSI) UNLESS NOTED OTHERWISE (UNO).

2. LAMINATED VENEER LUMBER (LVL) SHALL HAVE THE FOLLOWING MINIMUM PROPERTIES: Fb =2600 PSI, Fv = 285 PSI, E = 1900000 PSI. LAMINATED STRAND LUMBER (LSL) SHALL HAVE THE FOLLOWING MINIMUM PROPERTIES: Fb = 2325 PSI, Fv = 310 PSI, E = 1550000 PSI. PARALLEL STRAND LUMBER (PSL) UP TO 7" DEPTH SHALL HAVE THE FOLLOWING MINIMUM PROPERTIES: Fc = 2500 PSI, E =1800000 PSI. PARALLEL STRAND LUMBER (PSL) MORE THAN 7" DEPTH SHALL HAVE THE FOLLOWING MINIMUM PROPERTIES: Fc = 2900 PSI, E = 2000000 PSI. INSTALL ALL CONNECTIONS PER MANUFACTURER'S SPECIFICATIONS.

3. STRUCTURAL STEEL SHALL CONFORM TO THE FOLLOWING ASTM SPECIFICATIONS
   - A. W AND WT SHAPES: ASTM A992
   - B. CHANNELS AND ANGLES: ASTM A36
   - C. PLATES AND BARS: ASTM A36
   - D. HOLLOW STRUCTURAL SECTIONS: ASTM A500 GRADE B
   - E. STEEL PIPE: ASTM A53, GRADE B, TYPE E OR S

4. STEEL BEAMS SHALL BE SUPPORTED AT EACH END WITH A MINIMUM BEARING LENGTH OF 3 1/2" AND FULL FLANGE WIDTH (UNO). PROVIDE SOLID BEARING FROM BEAM SUPPORT TO FOUNDATION. BEAMS SHALL BE ATTACHED AT THE BOTTOM FLANGE TO EACH SUPPORT AS FOLLOWS (UNO):

   - A. WOOD FRAMING (2) 1/2" DIA. x 4" LONG LAG SCREWS
   - B. CONCRETE (2) 1/2" DIA. x 4" WEDGE ANCHORS
   - C. MASONRY (FULLY GROUTED) (2) 1/2" DIA. x 4" LONG SIMPSON TITEN HD ANCHORS
   - D. STEEL PIPE COLUMN (4) 3/4" DIA. A325 BOLTS OR 3/16" FILLET WELD

   LATERAL SUPPORT IS CONSIDERED ADEQUATE PROVIDING THE JOISTS ARE TOE NAILED TO THE 2x NAILER ON TOP OF THE STEEL BEAM, AND THE 2x NAILER IS SECURED TO THE TOP OF THE STEEL BEAM w/ (2) ROWS OF SELF TAPPING SCREWS @ 16" O.C. OR (2) ROWS OF 1/2" DIAMETER BOLTS @ 16" O.C. IF 1/2" BOLTS ARE USED TO FASTEN THE NAILER, THE STEEL BEAM SHALL BE FABRICATED w/ (2) ROWS OF 9/16" DIAMETER HOLES @ 16" O.C.

5. SQUARES DENOTE POINT LOADS WHICH REQUIRE SOLID BLOCKING TO GIRDER OR FOUNDATION. SHADED SQUARES DENOTE POINT LOADS FROM ABOVE WHICH REQUIRE SOLID BLOCKING TO SUPPORTING MEMBER BELOW.

6. ALL LOAD BEARING HEADERS TO CONFORM TO TABLE R602.7(1) AND R602.7(2) OF THE NCRC, 2024 EDITION OR BE (2) 2 x 6 WITH (1) JACK AND (1) KING STUD EACH END (UNO), WHICHEVER IS GREATER ALL HEADERS TO BE SECURED TO EACH JACK STUD WITH (4) 8d NAILS. ALL BEAMS TO BE SUPPORTED WITH (2) STUDS AT EACH BEARING POINT (UNO). INSTALL KING STUDS PER SECTION R602.7.5 OF THE NORTH CAROLINA RESIDENTIAL CODE, 2024 EDITION.

7. ALL BEAMS, HEADERS, OR GIRDER TRUSSES PARALLEL TO WALL ARE TO BEAR FULLY ON (1) JACK OR (2) STUDS MINIMUM OR THE NUMBER OF JACKS OR STUDS NOTED. ALL BEAMS OR GIRDER TRUSSES PERPENDICULAR TO WALL AND SUPPORTED BY (3) STUDS OR LESS ARE TO HAVE 1 1/2" MINIMUM BEARING (UNO). ALL BEAMS OR GIRDER TRUSSES PERPENDICULAR TO WALL AND SUPPORTED BY MORE THAN (3) STUDS OR OTHER NOTED COLUMN ARE TO BEAR FULLY ON SUPPORT COLUMN FOR ENTIRE WALL DEPTH (UNO). BEAM ENDS THAT BUTT INTO ONE ANOTHER ARE TO EACH BEAR EQUAL LENGTHS (UNO).

8. FLITCH BEAMS SHALL BE BOLTED TOGETHER USING 1/2" DIAMETER BOLTS (ASTM A307) WITH WASHERS PLACED AT THREADED END OF BOLT. BOLTS SHALL BE SPACED AT 24" CENTERS (MAXIMUM), AND STAGGERED AT TOP AND BOTTOM OF BEAM (2" EDGE DISTANCE), WITH (2) BOLTS LOCATED AT 6" FROM EACH END (UNO).

9. ALL I-JOIST OR TRUSS LAYOUTS ARE TO BE IN COMPLIANCE WITH THE OVERALL DESIGN SPECIFIED ON THE PLANS. ALL DEVIATIONS ARE TO BE BROUGHT TO THE ATTENTION OF THE ENGINEER OF RECORD PRIOR TO INSTALLATION.

10. BRACED WALL PANELS SHALL BE CONSTRUCTED ACCORDING TO THE NORTH CAROLINA RESIDENTIAL CODE 2024 EDITION WALL BRACING CRITERIA. THE AMOUNT, LENGTH, AND LOCATION OF BRACING SHALL COMPLY WITH ALL APPLICABLE TABLES IN SECTION R602.10.

11. PROVIDE DOUBLE JOIST UNDER ALL WALLS PARALLEL TO FLOOR JOISTS. PROVIDE SUPPORT UNDER ALL WALLS PARALLEL TO FLOOR TRUSSES OR I-JOISTS PER STRUCTURAL PLAN. INSTALL BLOCKING BETWEEN JOISTS OR TRUSSES FOR POINT LOAD SUPPORT FOR ALL POINT LOADS ALONG OFFSET LOAD LINES.

12. FOR ALL HEADERS SUPPORTING BRICK VENEER THAT ARE LESS THAN 8'-0" IN LENGTH, REST A 6" x 4" x 5/16" STEEL ANGLE WITH 6" MINIMUM EMBEDMENT AT SIDES FOR BRICK SUPPORT (U.N.O). FOR ALL HEADERS 8'-0" AND GREATER IN LENGTH, BOLT A 6" x 4" x 5/16" STEEL ANGLE TO HEADER WITH 1/2" LAG SCREWS AT 12" O.C. STAGGERED FOR BRICK SUPPORT. FOR ALL BRICK SUPPORT AT ROOF LINES, BOLT A 6" x 4" x 5/16" STEEL ANGLE TO (2) 2 x 10 BLOCKING INSTALLED w/ (4) 12d NAILS EA. PLY BETWEEN WALL STUDS WITH (2) ROWS OF 1/2" LAG SCREWS AT 12" O.C. STAGGERED AND IN ACCORDANCE WITH SECTION R703.8.2.1 OF THE NCRC, 2024 EDITION.

13. FOR STICK FRAMED ROOFS: CIRCLES DENOTE (3) 2 x 4 POSTS FOR ROOF MEMBER SUPPORT. HIP SPLICES ARE TO BE SPACED A MINIMUM OF 8'-0". FASTEN MEMBERS WITH THREE ROWS OF 12d NAILS AT 16" O.C. FRAME DORMER WALLS ON TOP OF DOUBLE OR TRIPLE RAFTERS AS SHOWN (UNO).

14. FOR TRUSSED ROOFS: FRAME DORMER WALLS ON TOP OF 2 x 4 LADDER FRAMING AT 24" O.C. BETWEEN ADJACENT ROOF TRUSSES. STICK FRAME OVER-FRAMED ROOF SECTIONS WITH 2 x 8 RIDGES, 2 x 6 RAFTERS AT 16" O.C. AND FLAT 2 x 10 VALLEYS (UNO).

15. ALL 4 x 4 AND 6 x 6 POSTS TO BE INSTALLED WITH 700 LB CAPACITY UPLIFT CONNECTORS TOP AND BOTTOM (UNO.) POSTS MAY BE SECURED TO WOOD FRAMING WITH SIMPSON CS16 COIL STRAPPING WITH 9" END LENGTHS OR (2) 6" LONG SIMPSON SDS SCREWS (OR EQUAL) DRIVEN AT AN ANGLE FROM OPPOSITE SIDES. FOR MASONRY OR CONCRETE FOUNDATION USE SIMPSON POST BASE.

16. CONSTRUCT ALL WOOD DECKS ACCORDING TO CHAPTER 47-WOOD DECKS.

This sealed page is to be used in conjunction with a full plan set engineered by J.S. Thompson Engineering, Inc. only. Use of this individual sealed page within architectural pages or shop drawings by others is a punishable offense under N.C. Statute § 89C-23

J.S. THOMPSON
ENGINEERING, INC
333 EAST SIX FORKS ROAD, SUITE 180 RALEIGH, NC 27609
PHONE: (919) 789-9919 FAX: (919) 789-9921
N.C. LICENSE NO.: C-1733

STANDARD STRUCTURAL NOTES

DATE: NOVEMBER 4, 2024

DRAWN BY: JST

ENGINEERED BY: JST

STRUCTURAL NOTES